SAVE FOR FUTURE

C.R.I. PUMPS

Pumping trust. Worldwide.

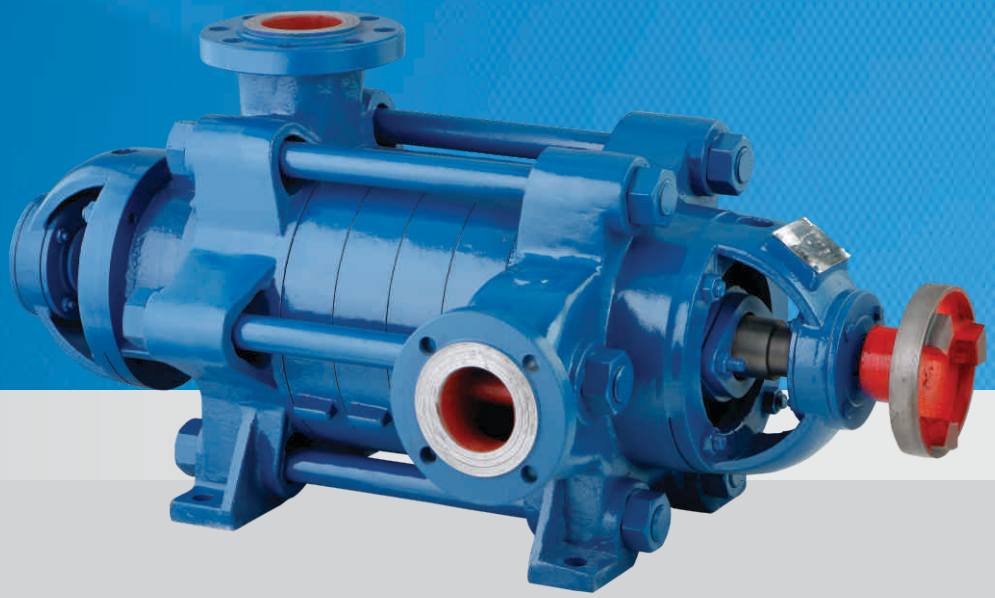

HORIZONTAL MULTI-STAGE CENTRIFUGAL PUMP

HM SERIES

An ISO 9001, ISO 14001 & OHSAS 18001 Company

C.R.I. PUMPS
Pumping trust. Worldwide.

THE BEGINNING

of C.R.I., way back in 1961, was a resolute attempt to produce a few irrigation equipments using the limited facilities of an in-house foundry. Eventually the founder's dream was coming true as the small production unit he started kept growing rapidly. Now, after more than five eventful decades, it is an enormous, widely reputed organization, which produces more than 2300 varieties of perfectly engineered pumps and motors and sells its products in numerous countries spread across 6 continents.

C.R.I. IS ONE AMONG

the few pioneers in the world to produce 100% stainless steel submersible pumps. Having achieved a record production capacity of over 2 million pumps per annum, today C.R.I. is rubbing its shoulders with the best brands in the world, with advanced technology and safety standards as its hallmarks.

THE INFRASTRUCTURE

of C.R.I. is pretty comprehensive with state-of-the-art machineries and high potential in-house R&D recognised by the ministry of science and technology, Govt. of India - all within its own covered area of 300,000 square metres. The production environment is accredited with ISO 9001, ISO 14001 & OHSAS 18001 certifications and the products are CE, UR/UL, IEC, TSE & ISI certified. The R&D team always stays in tune with the changing scenario and seldom fails in coming up with outstanding solutions every time.

NEEDLESS TO SAY,

behind this legendary growth lies the untiring, innovative, enthusiastic and dedicated team work. and, of course, a flawlessly maintained value system too. The name C.R.I. itself encapsulates the company's ethos: ''Commitment, Reliability, Innovation''.

C.R.I. PUMPS
Pumping trust. Worldwide.

Vision, Mission and Values

To be the industry leader providing best - in - class fluid management solutions to individual and institutional customers and societies in our chosen markets.

We will achieve this through our dedicated efforts to enhance the welfare of all our stakeholders and by living by our values of **commitment, reliability** and **innovation.**

C O N T E N T S

	Page No.
HM Series	
Construction, Features	1
Application, Operation limits & MOC	2
Cross Sectional Drawing	3 - 5
Performance Curves & Tables	6 - 35
Overall Dimension Drawing	36
Overall Dimensions	37 - 43
Overall Dimension Drawing - High Pressure	44
Overall Dimensions - High Pressure	45
Inlet and Outlet Flanges Dimension	46 - 47

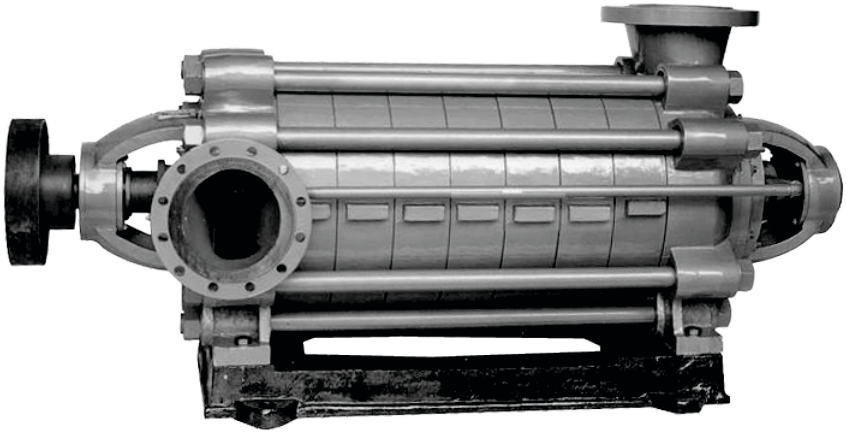

HORIZONTAL MULTISTAGE PUMPS

C.R.I. Horizontal multi-stage centrifugal pumps are engineered to perfection with innovative design and stringent quality control for trouble free operation. These pumps are robust in construction and tested to a high standard of excellence. High grade materials are used to make these pumps durable, efficient and easy to maintain and all rotating parts are statically & dynamically balanced shaft is made of high quality steel, precision ground of ample size for transmitting the rated horsepower.

These Horizontal multi-stage centrifugal pumps are of Single Suction, non-self priming type. The impellers are of radial flow design and are balanced to handle hydraulic axial thrust. Pump shaft is supplied by roller contact or sliding bearings, and balancing plate is provided to withstand axial force and avoid excessive abrasion of rotating parts. Pumps are available with oil lubricating bearings for high head operation & high temperature liquids from 80 ◦ C to 160 ◦ C. Based on application directions of the inlet & outlet ports can be fixed upward or right or left side. These pumps are also available with multi outlets for specific applications.

Generally these pumps are used to transfer clear water without solid particles and are also used to transfer oil, corrosive & abrasive chemicals, liquids without any solid particles. For which suitable materials of construction and sealing type to be chosen.

These pumps can be coupled either with electric motors or IC engines.

Features :

- Dynamically balanced rotating parts
- Rigid Constructions
- High operating efficiency
- Heavy duty bearings ensure long life
- Available with different MOC & wide range for various applications
- Available both in mechanical seal and soft packed stuffing box design
- Available with multi outlets
- These pumps are supplied with Roller bearings with grease lubrication and Sliding bearing with thin oil lubrication is used for high head and high temperature liquid applications.

In view of continuous developments, the information / descriptions / specifications / illustrations are subject to change without notice.

Model Identification Code

XX X - XXX - XX / XX X X (X)

HM - Horz. Multistage Centrifugal Pump (Hi Flow)

Type of Appl.
W - Water Pumps
B - Boiler Feed Pumps
A - Anti-Corrosive Pumps
L - Oil Pumps

Nominal Flow in m³/h
46 - 46m³/h

Single Stage Head (m)

Applicable only for Multiple outlets
2 - 2 outlets 3 - 3 outlets

Type of Seal
M - Mechanical Seal
G - Gland Packing

Type of Materials of Construction
Volute Casing / Impeller / Shaft
C - CI / CI / EN-8
B - CI / B / EN-8
S - SS 304 / SS 304 / SS 304/316

No. of Stages

HMW - 280 - 43/3M : 3stage, 280m³/h, 43m per stage, Horz. Multistage Pump for clear water with M. Seal

Applications

- General Water supply
- Drinking water transfer
- Boiler feed
- Pressure Boosting
- Irrigation
- Hot & cold water circulation
- HVAC
- Fire fighting
- Power Plants
- Dewatering
- Various industrial applications

Operation Limits

Outlet Size range	DN 40 to DN 300 mm
Flow Range	up to 850 m³/hr
Head Range	
HMW, HMA & HML	up to 816 m
HMB	up to 1110 m
Speed	1450 & 2900 rpm
Operating Temperature	
HMW	< 80 Deg C
HMA & HML	- 20 to 105 Deg C
HMB	- 20 to 160 Deg C

Material of Construction

Pump / Stage Casing	Cast Iron / Cast SS / Duplex Steel
Impeller	Cast Iron/ Cast SS / Bronze / Phosphor Bronze / Chrome Steel / Duplex Steel
Casing Wear ring	Cast Iron / Bronze / Steel
Shaft	Carbon Steel / Stainless Steel
Shaft Sleeve	Stainless Steel
Connecting Rods	Carbon Steel / SS 420

In view of continuous developments, the information / descriptions / specifications / illustrations are subject to change without notice.

Cross Sectional Drawing

HM (W, A & L)

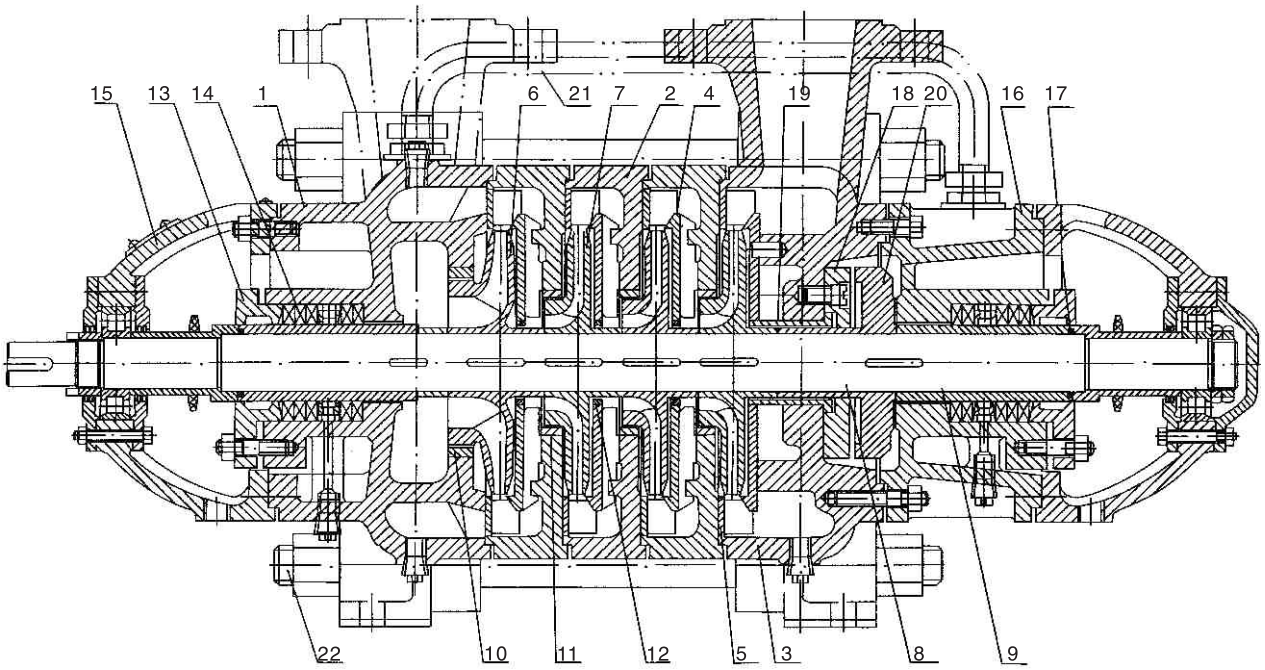

No	Name	No	Name	No	Name
1	Water Inlet Section	9	Bushing	17	O-ring
2	Middle Section	10	First Stage Sealing Ring	18	Balancing Ring
3	Water Outlet Section	11	Sealing Ring	19	Balancing Ring Bushing
4	Guide Vane	12	Guide Vane Bushing	20	Balance Disc
5	End Guide Vane	13	Flange Gland	21	Balance Water Pipe Part
6	First Stage Impeller	14	Packing	22	Tension Bolt
7	Final Stage Impeller	15	Bearing Part		
8	Shaft	16	Tail Hood		

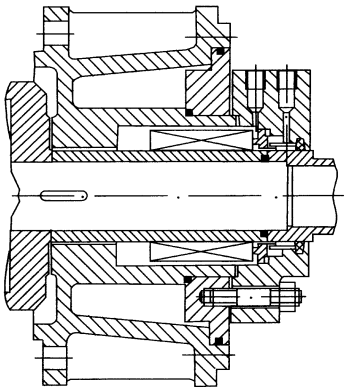

Mechanical seal structure
(Mostly adopted by HMA and HML types)

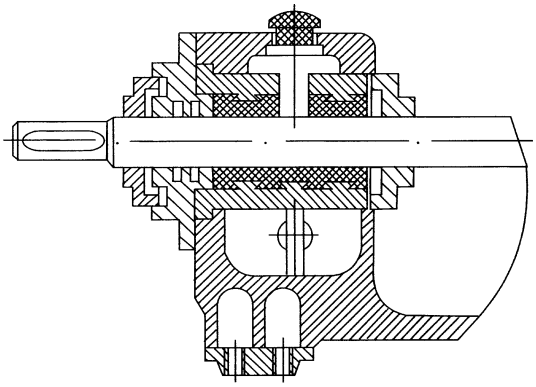

Sliding bearing structure of
HMW 85-67 or HMW 155-67

In view of continuous developments, the information / descriptions / specifications / illustrations are subject to change without notice.

Cross Sectional Drawing - HMB Pump (Low/medium Pressure) - Packing Seal

Water of Water Seal from the impeller outlet of the first stage

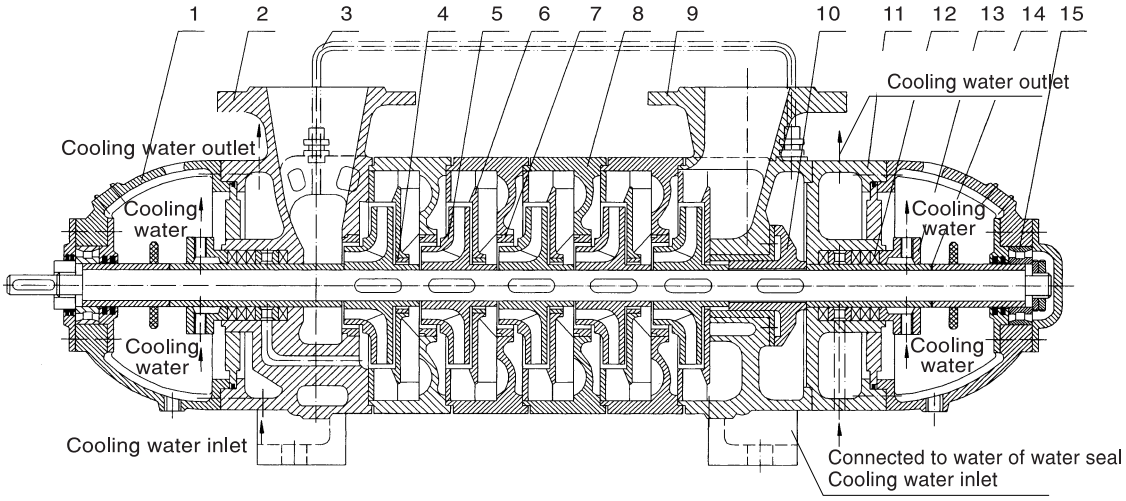

No	Name	No	Name	No	Name
1	Bearing Body	6	Guide Vane	11	Tail Hood
2	Water Inlet Section	7	Sealing Ring	12	Packing Seal Part
3	Balance Water Pipe	8	Middle Section	13	Water-cooling Flange Gland
4	Guide Vane Bushing	9	Water Inlet Section	14	O-ring
5	Impeller	10	Balance Disc	15	Bearing Part

Water of Water Seal from External Supply

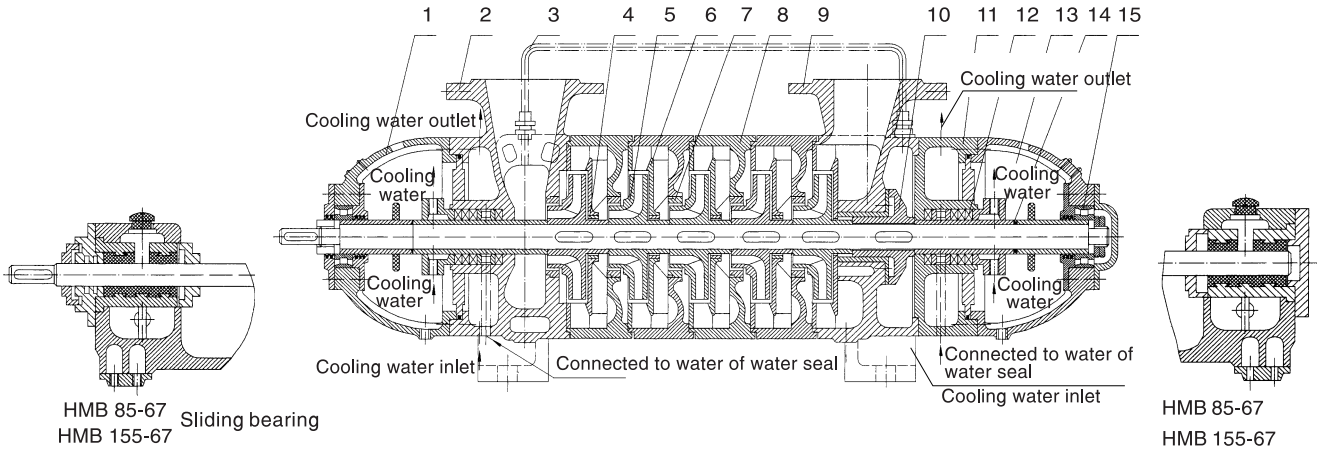

No	Name	No	Name	No	Name
1	Bearing Body	6	Guide Vane	11	Tail Hood
2	Suction Section	7	Sealing Ring	12	Packing Seal Part
3	Balance Water Pipe	8	Middle Section	13	Water-cooling Flange Gland
4	Diffuser Sleeve	9	Water Inlet Section	14	O-ring
5	Impeller	10	Balance Disc	15	Bearing Part

In view of continuous developments, the information / descriptions / specifications / illustrations are subject to change without notice.

Cross Sectional Drawing - HMB Pump (Low/medium Pressure)

Mechanical Seal

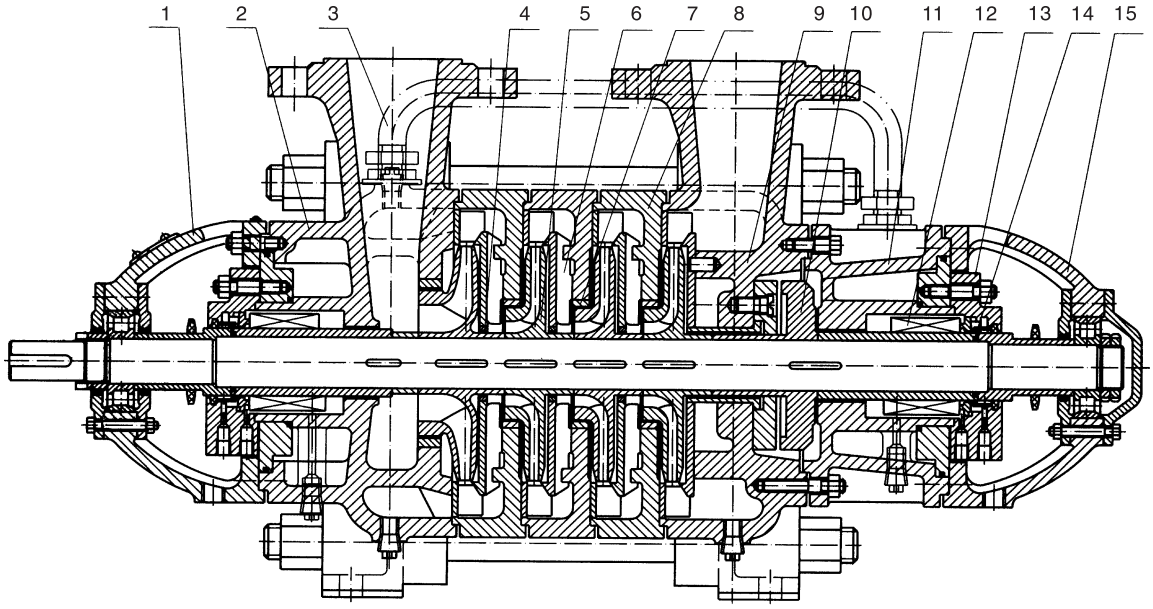

No	Name	No	Name	No	Name
1	Bearing Body	6	Guide Vane	11	Tail Hood
2	Water Inlet Section	7	Sealing Ring	12	Mechanical seal part
3	Balance Pipe	8	Middle Section	13	Gland Of Water-cooling Mechanical Seal
4	Guide Vane Bushing	9	Water Outlet Section	14	O-ring
5	Impeller	10	Balance Disc	15	Bearing Part

Cross Sectional Drawing - HMB Pump (High Pressure)

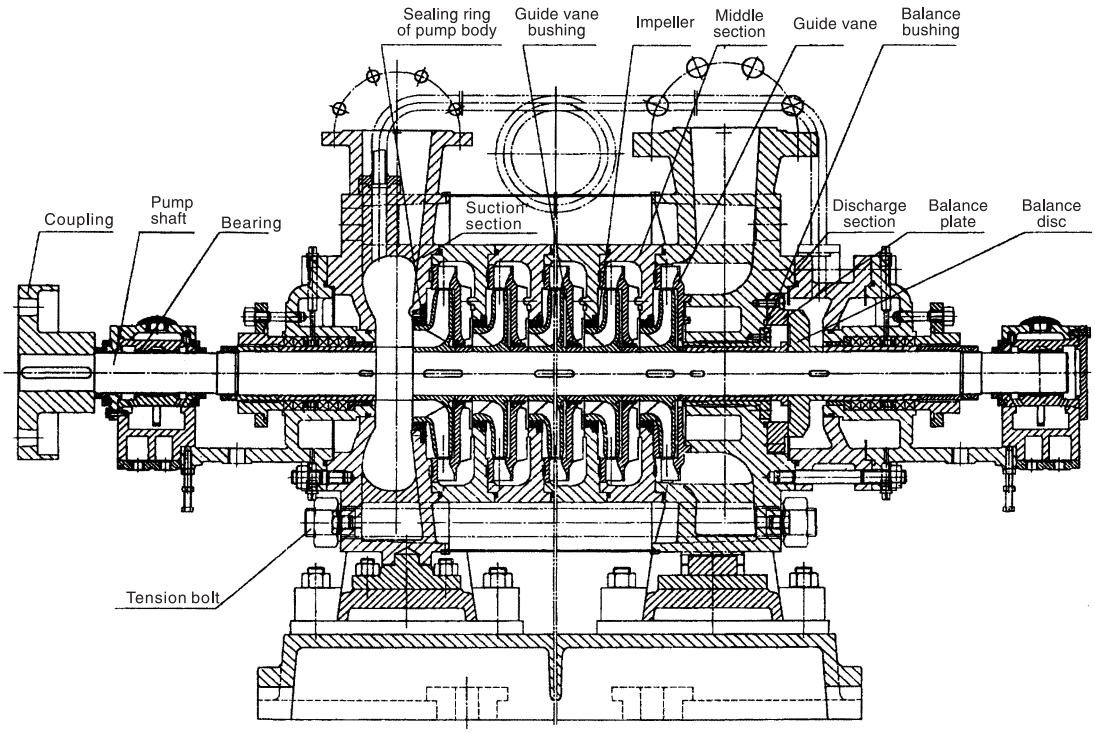

In view of continuous developments, the information / descriptions / specifications / illustrations are subject to change without notice.

Performance Curve

HMW-6-25

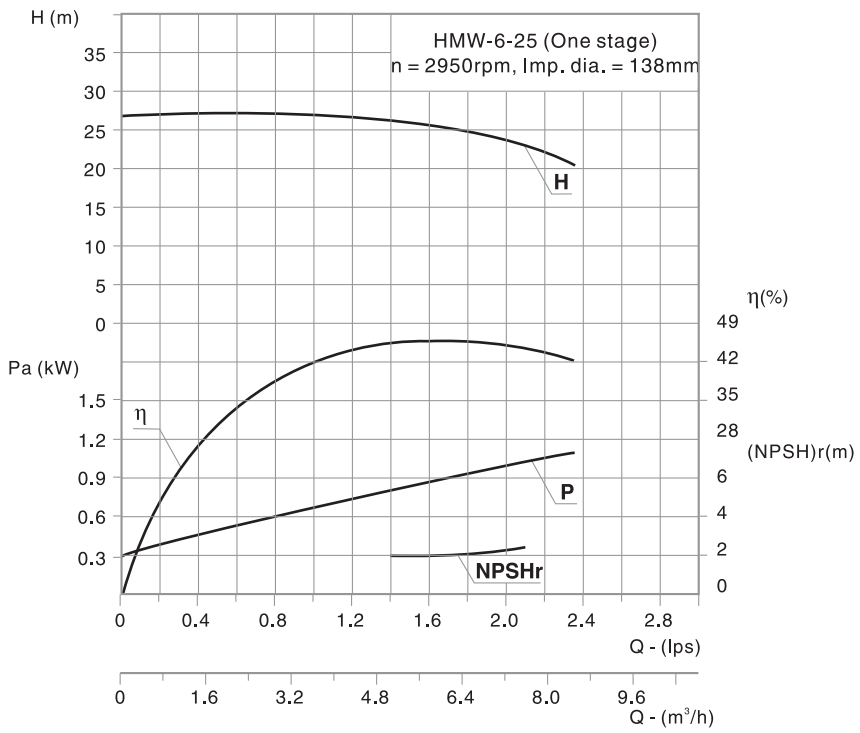

Performance Table

Stage	Q Flow		H Head	n Speed	η Eff.	N Shaft Power	Motor		(NPSH)r	D Impeller Diameter
							Power	Frame Size - Pole		
	(m^3/h)	(L/s)	(m)	(rpm)	(%)	(kW)	(kW)		(m)	(mm)
2	3.75 6.3 7.5	1.04 1.75 2.08	51 50 49		35 46.5 48	1.49 1.84 2.08	3	100L-2	2.0 2.0 2.5	
3	3.75 6.3 7.5	1.04 1.75 2.08	76.5 75 73.5		35 46.5 48	2.23 2.77 3.12	5.5	132S1-2	2.0 2.0 2.5	
4	3.75 6.3 7.5	1.04 1.75 2.08	102 100 98		35 46.5 48	2.98 3.69 4.16	7.5	132S2-2	2.0 2.0 2.5	
5	3.75 6.3 7.5	1.04 1.75 2.08	127.5 125 122.5		35 46.5 48	3.73 4.61 5.20	7.5	132S2-2	2.0 2.0 2.5	
6	3.75 6.3 7.5	1.04 1.75 2.08	153 150 147		35 46.5 48	4.47 5.53 6.24	11	160M1-2	2.0 2.0 2.5	
7	3.75 6.3 7.5	1.04 1.75 2.08	178.5 175 171.5	2950	35 46.5 48	5.22 6.45 7.28	11	160M1-2	2.0 2.0 2.5	Ø138
8	3.75 6.3 7.5	1.04 1.75 2.08	204 200 196		35 46.5 48	5.96 7.37 8.32	15	160M2-2	2.0 2.0 2.5	
9	3.75 6.3 7.5	1.04 1.75 2.08	229.5 225 220.5		35 46.5 48	6.71 8.29 9.36	15	160M2-2	2.0 2.0 2.5	
10	3.75 6.3 7.5	1.04 1.75 2.08	255 250 245		35 46.5 48	7.45 9.21 10.40	18.5	160L-2	2.0 2.0 2.5	
11	3.75 6.3 7.5	1.04 1.75 2.08	280.5 275 269.5		35 46.5 48	8.20 10.13 11.44	18.5	160L-2	2.0 2.0 2.5	
12	3.75 6.3 7.5	1.04 1.75 2.08	306 300 294		35 46.5 48	8.94 11.05 12.48	18.5	160L-2	2.0 2.0 2.5	

* The 3rd digit of model name 'W' indicates water application. This digit can be changed suitable for other application (Refer the model identification code).

In view of continuous developments, the information / descriptions / specifications / illustrations are subject to change without notice.

Performance Curve

HMW-6-50

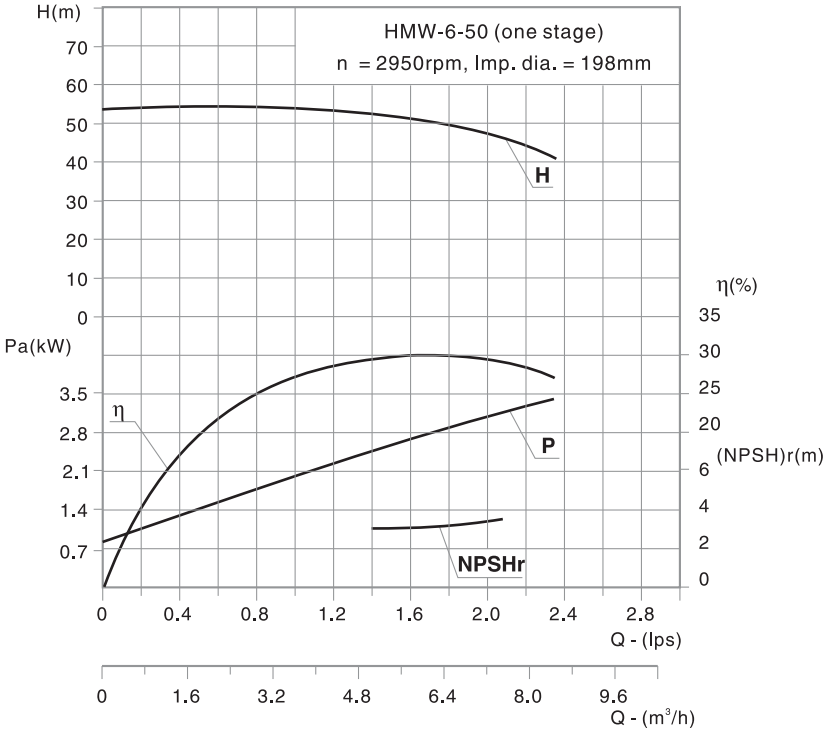

Performance Table

Stage	Q Flow		H Head	n Speed	η Eff.	N Shaft Power	Motor		(NPSH)r	D Impeller Diameter
							Power	Frame Size - Pole		
	(m^3/h)	(L/s)	(m)	(rpm)	(%)	(kW)	(kW)		(m)	(mm)
2	3.75 6.3 7.5	1.04 1.75 2.08	104 100 96	2950	28 30 29	3.79 5.72 6.76	11	160M1-2	3.0 3.0 3.5	Ø198
3	3.75 6.3 7.5	1.04 1.75 2.08	106 150 144		28 30 29	5.69 8.58 10.1	15	160M2-2	3.0 3.0 3.5	
4	3.75 6.3 7.5	1.04 1.75 2.08	208 200 192		28 30 29	7.58 11.4 13.5	18.5	160L-2	3.0 3.0 3.5	
5	3.75 6.3 7.5	1.04 1.75 2.08	260 250 240		28 30 29	9.48 14.3 16.9	22	180M-2	3.0 3.0 3.5	
6	3.75 6.3 7.5	1.04 1.75 2.08	312 300 288		28 30 29	11.4 17.2 20.3	30	200L1-2	3.0 3.0 3.5	
7	3.75 6.3 7.5	1.04 1.75 2.08	364 350 336		28 30 29	13.3 20.0 23.7	30	200L1-2	3.0 3.0 3.5	
8	3.75 6.3 7.5	1.04 1.75 2.08	416 400 384		28 30 29	15.2 22.9 27.0	37	200L2-2	3.0 3.0 3.5	
9	3.75 6.3 7.5	1.04 1.75 2.08	468 450 432		28 30 29	17.1 25.7 30.4	37	200L2-2	3.0 3.0 3.5	
10	3.75 6.3 7.5	1.04 1.75 2.08	520 500 480		28 30 29	19.0 28.6 33.8	45	225M-2	3.0 3.0 3.5	
11	3.75 6.3 7.5	1.04 1.75 2.08	572 550 528		28 30 29	20.8 31.4 37.2	45	225M-2	3.0 3.0 3.5	
12	3.75 6.3 7.5	1.04 1.75 2.08	624 600 576		28 30 29	22.7 34.3 40.6	55	250M-2	3.0 3.0 3.5	

* The 3rd digit of model name 'W' indicates water application. This digit can be changed suitable for other application (Refer the model identification code).

In view of continuous developments, the information / descriptions / specifications / illustrations are subject to change without notice.

Performance Curve

HMW-12-25

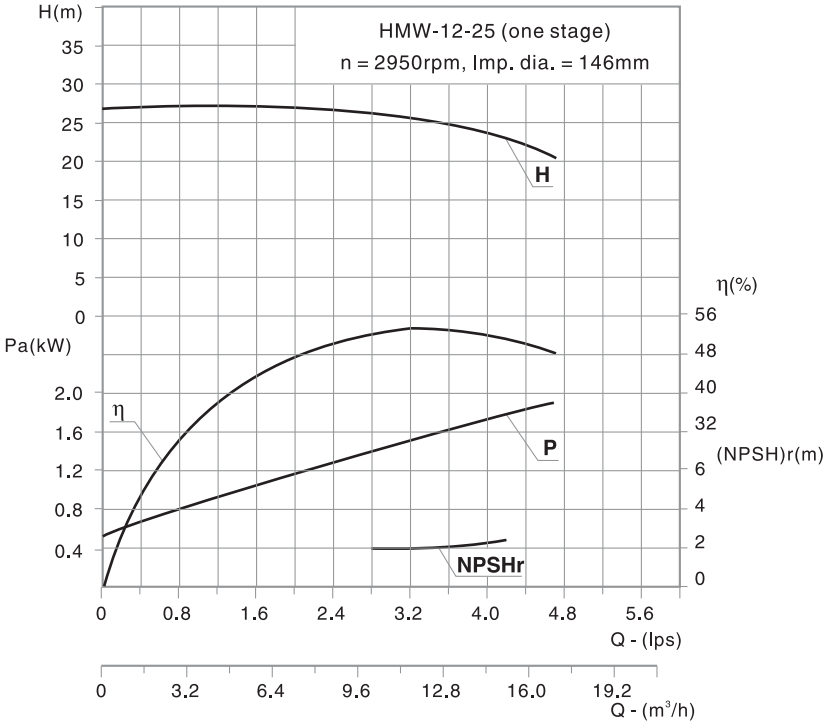

Performance Table

Stage	Q Flow		H Head	n Speed	η Eff.	N Shaft Power	Motor		(NPSH)r	D Impeller Diameter
							Power	Frame Size - Pole		
	(m^3/h)	(L/s)	(m)	(rpm)	(%)	(kW)	(kW)		(m)	(mm)
2	7.5 12.5 15	2.08 3.47 4.17	56.4 50 46	2950	44 54 53	2.65 3.15 3.55	5.5	132S1-2	2.0 2.0 2.5	Ø146
3	7.5 12.5 15	2.08 3.47 4.17	84.6 75 69		44 54 53	3.93 4.73 5.32	7.5	132S2-2	2.0 2.0 2.5	
4	7.5 12.5 15	2.08 3.47 4.17	112.8 100 92		44 54 53	5.24 6.30 7.09	11	160M1-2	2.0 2.0 2.5	
5	7.5 12.5 15	2.08 3.47 4.17	141 125 115		44 54 53	6.55 7.88 8.86	11	160M1-2	2.0 2.0 2.5	
6	7.5 12.5 15	2.08 3.47 4.17	169.2 150 138		44 54 53	7.85 9.46 10.64	15	160M2-2	2.0 2.0 2.5	
7	7.5 12.5 15	2.08 3.47 4.17	197.4 175 161		44 54 53	9.16 11.0 12.41	15	160M2-2	2.0 2.0 2.5	
8	7.5 12.5 15	2.08 3.47 4.17	225.6 200 184		44 54 53	10.47 12.61 14.18	18.5	160L-2	2.0 2.0 2.5	
9	7.5 12.5 15	2.08 3.47 4.17	253.8 225 207		44 54 53	11.78 14.18 15.95	18.5	160L-2	2.0 2.0 2.5	
10	7.5 12.5 15	2.08 3.47 4.17	282 250 230		44 54 53	13.09 15.76 17.73	22	180M-2	2.0 2.0 2.5	
11	7.5 12.5 15	2.08 3.47 4.17	310.2 275 253		44 54 53	14.4 17.34 19.5	22	180M-2	2.0 2.0 2.5	
12	7.5 12.5 15	2.08 3.47 4.17	338.4 300 276		44 54 53	15.7 18.9 21.3	30	200L1-2	2.0 2.0 2.5	

* The 3rd digit of model name 'W' indicates water application. This digit can be changed suitable for other application (Refer the model identification code).

In view of continuous developments, the information / descriptions / specifications / illustrations are subject to change without notice.

Performance Curve

HMW-12-50

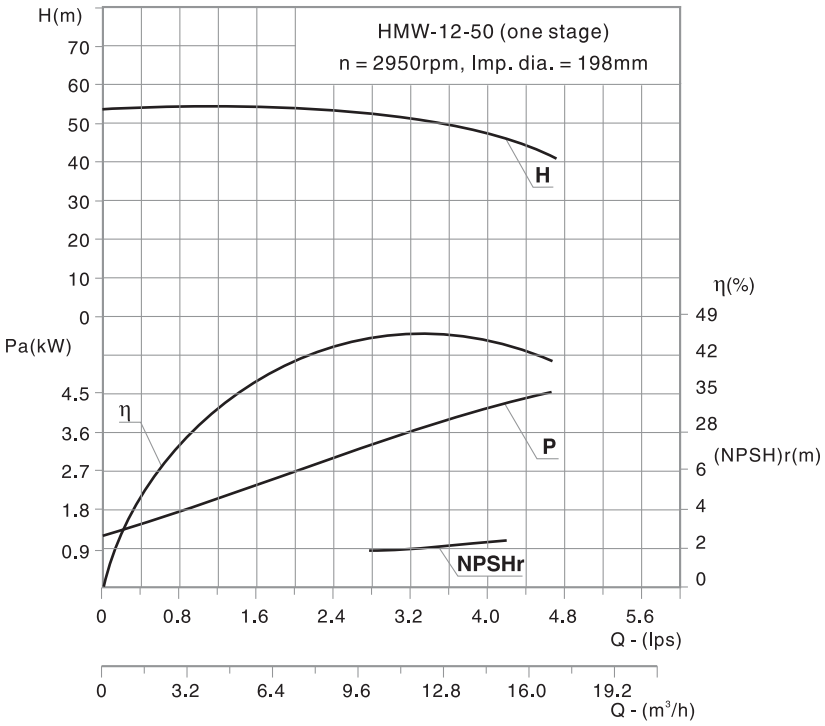

Performance Table

Stage	Q Flow		H Head	n Speed	η Eff.	N Shaft Power	Motor		(NPSH)r	D Impeller Diameter
							Power	Frame Size - Pole		
	(m^3/h)	(L/s)	(m)	(rpm)	(%)	(kW)	(kW)		(m)	(mm)
2	7.5 12.5 15	2.08 3.47 4.17	108 100 93		37.8 45 45.9	5.8 7.6 8.3	11	160M1-2	2 2 2.5	
3	7.5 12.5 15	2.08 3.47 4.17	162 150 139.5		37.8 45 45.9	8.8 11.3 12.4	18.5	160L-2	2 2 2.5	
4	7.5 12.5 15	2.08 3.47 4.17	216 200 186		37.8 45 45.9	11.7 15.1 16.6	22	180M-2	2 2 2.5	
5	7.5 12.5 15	2.08 3.47 4.17	270 250 232.5		37.8 45 45.9	14.6 18.9 20.7	30	200L1-2	2 2 2.5	
6	7.5 12.5 15	2.08 3.47 4.17	324 300 279		37.8 45 45.9	17.6 22.7 24.8	30	200L1-2	2 2 2.5	
7	7.5 12.5 15	2.08 3.47 4.17	378 350 325.5	2950	37.8 45 45.9	20.4 26.5 29.0	37	200L2-2	2 2 2.5	Ø198
8	7.5 12.5 15	2.08 3.47 4.17	432 400 372		37.8 45 45.9	23.3 30.3 33.1	45	225M-2	2 2 2.5	
9	7.5 12.5 15	2.08 3.47 4.17	486 450 418.5		37.8 45 45.9	26.3 34.0 37.3	45	225M-2	2 2 2.5	
10	7.5 12.5 15	2.08 3.47 4.17	540 500 465		37.8 45 45.9	29.2 37.8 41.4	55	250M-2	2 2 2.5	
11	7.5 12.5 15	2.08 3.47 4.17	594 550 511.5		37.8 45 45.9	32.1 41.6 45.5	55	250M-2	2 2 2.5	
12	7.5 12.5 15	2.08 3.47 4.17	648 600 558		37.8 45 45.9	35.0 45.4 50.0	75	280S-2	2 2 2.5	

* The 3rd digit of model name 'W' indicates water application. This digit can be changed suitable for other application (Refer the model identification code).

In view of continuous developments, the information / descriptions / specifications / illustrations are subject to change without notice.

Performance Curve

HMW-25-30

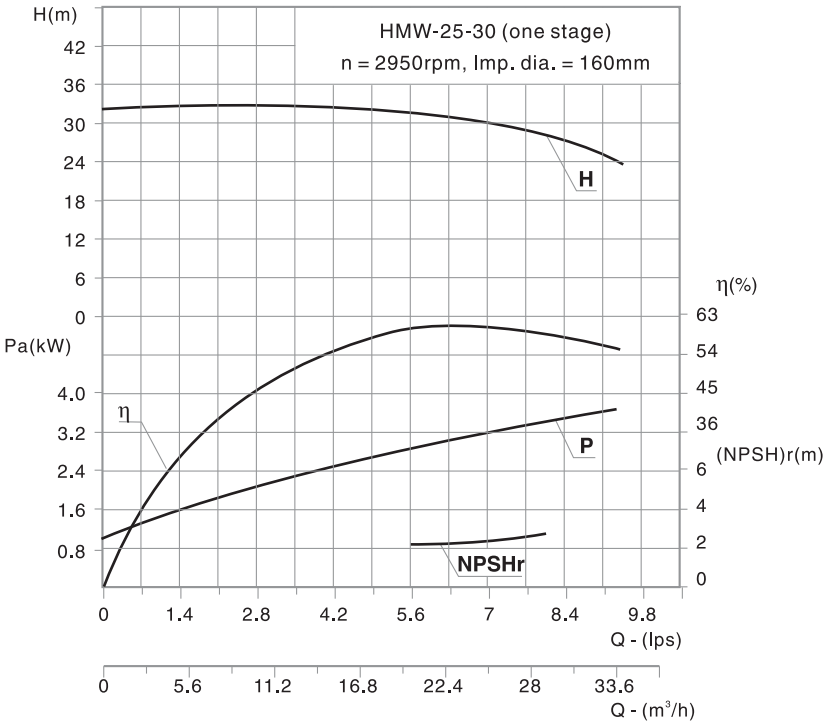

Performance Table

Stage	Q Flow		H Head	n Speed	η Eff.	N Shaft Power	Motor		(NPSH)r	D Impeller Diameter
							Power	Frame Size - Pole		
	(m^3/h)	(L/s)	(m)	(rpm)	(%)	(kW)	(kW)		(m)	(mm)
2	15	4.17	68	2950	50	5.56	11	160M1-2	2.2	Ø160
	25	6.94	60		62	6.58			2.2	
	30	8.33	55		63	7.14			2.4	
3	15	4.17	102		50	8.33	15	160M2-2	2.2	
	25	6.94	90		62	9.88			2.2	
	30	8.33	82.5		63	10.7			2.4	
4	15	4.17	136		50	11.11	18.5	160L-2	2.2	
	25	6.94	120		62	13.1			2.2	
	30	8.33	110		63	14.26			2.4	
5	15	4.17	170		50	13.89	22	180M-2	2.2	
	25	6.94	150		62	16.47			2.2	
	30	8.33	137.5		63	17.83			2.4	
6	15	4.17	204		50	16.67	30	200L1-2	2.2	
	25	6.94	180		62	19.77			2.2	
	30	8.33	165		63	21.4			2.4	
7	15	4.17	238		50	19.44	30	200L1-2	2.2	
	25	6.94	210		62	23.1			2.2	
	30	8.33	192.5		63	24.96			2.4	
8	15	4.17	272		50	22.22	37	200L2-2	2.2	
	25	6.94	240		62	26.4			2.2	
	30	8.33	220		63	28.53			2.4	
9	15	4.17	306		50	25.0	37	200L2-2	2.2	
	25	6.94	270		62	29.65			2.2	
	30	8.33	247.5		63	32.1			2.4	
10	15	4.17	340		50	27.8	45	225M-2	2.2	
	25	6.94	300		62	32.9			2.2	
	30	8.33	275		63	35.7			2.4	

* The 3rd digit of model name 'W' indicates water application. This digit can be changed suitable for other application (Refer the model identification code).

In view of continuous developments, the information / descriptions / specifications / illustrations are subject to change without notice.

Performance Curve

HMW-25-50

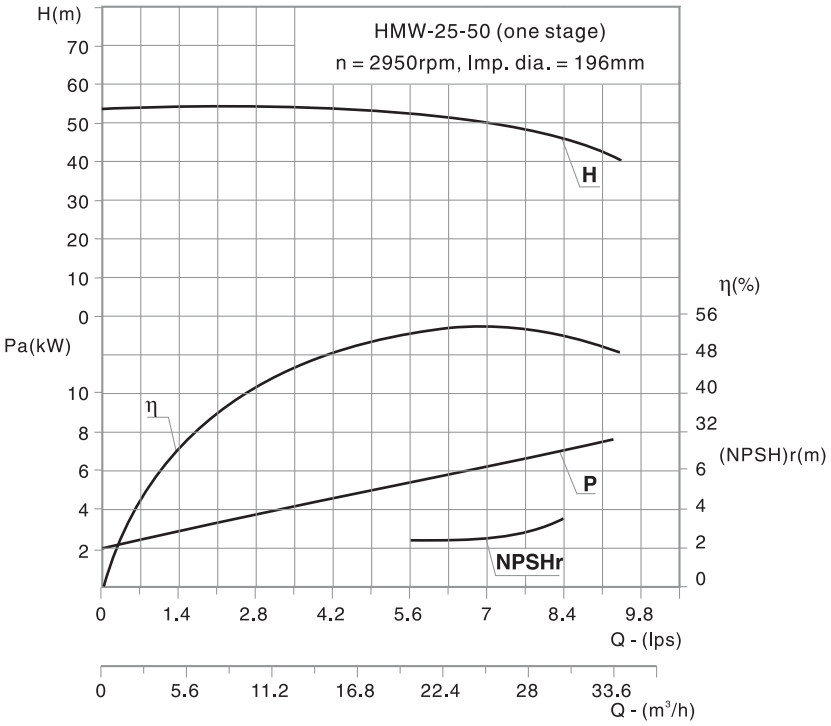

Performance Table

Stage	Q Flow		H Head	n Speed	η Eff.	N Shaft Power	Motor		(NPSH)r	D Impeller Diameter
							Power	Frame Size - Pole		
	(m^3/h)	(L/s)	(m)	(rpm)	(%)	(kW)	(kW)		(m)	(mm)
3	15 25 28	4.17 6.94 7.78	154.5 150 144	2950	44 54 54	14.3 18.9 20.3	30	180M-2	2.4 2.7 2.8	Ø196
4	15 25 28	4.17 6.94 7.78	206 200 192		44 54 54	19.1 25.2 27.1	30	200L1-2	2.4 2.7 2.8	
5	15 25 28	4.17 6.94 7.78	257.5 250 240		44 54 54	23.9 31.5 33.9	37	200L2-2	2.4 2.7 2.8	
6	15 25 28	4.17 6.94 7.78	309 300 288		44 54 54	28.6 37.8 40.7	45	225M-2	2.4 2.7 2.8	
7	15 25 28	4.17 6.94 7.78	360.5 350 336		44 54 54	33.4 44.1 47.5	55	250M-2	2.4 2.7 2.8	
8	15 25 28	4.17 6.94 7.78	412 400 384		44 54 54	38.2 50.4 54.2	75	280S-2	2.4 2.7 2.8	
9	15 25 28	4.17 6.94 7.78	363.5 450 432		44 54 54	43.0 56.7 61.0	75	280S-2	2.4 2.7 2.8	
10	15 25 28	4.17 6.94 7.78	515 500 480		44 54 54	47.7 63.0 67.8	75	280S-2	2.4 2.7 2.8	
11	15 25 28	4.17 6.94 7.78	566 550 528		44 54 54	52.5 69.3 74.6	90	280M-2	2.4 2.7 2.8	
12	15 25 28	4.17 6.94 7.78	618 600 576		44 54 54	57.6 75.6 81.4	110	315S-2	2.4 2.7 2.8	

* The 3rd digit of model name 'W' indicates water application. This digit can be changed suitable for other application (Refer the model identification code).

In view of continuous developments, the information / descriptions / specifications / illustrations are subject to change without notice.

Performance Curve

HMW-46-30

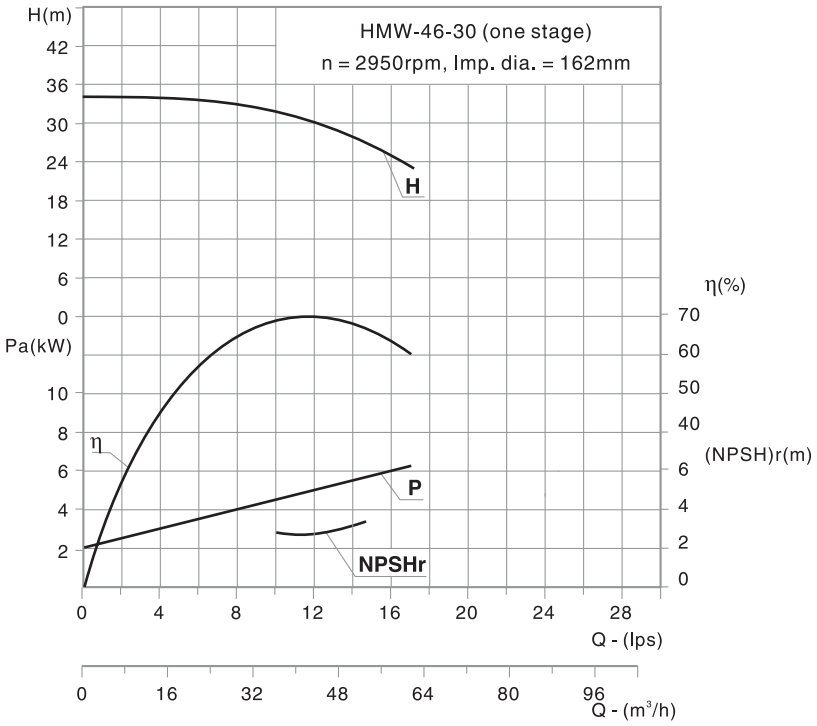

Performance Table

Stage	Q Flow		H Head	n Speed	η Eff.	N Shaft Power	Motor		(NPSH)r	D Impeller Diameter
							Power	Frame Size - Pole		
	(m^3/h)	(L/s)	(m)	(rpm)	(%)	(kW)	(kW)		(m)	(mm)
2	30 46 55	8.33 12.8 15.3	68 60 54	2950	64 70 68	8.68 10.74 11.89	15	160M2-2	2.4 2.8 4.6	Ø162
3	30 46 55	8.33 12.8 15.3	102 90 81		64 70 68	13.02 16.11 17.84	22	180M-2	2.4 2.8 4.6	
4	30 46 55	8.33 12.8 15.3	136 120 108		64 70 68	17.36 21.48 23.79	30	200L1-2	2.4 2.8 4.6	
5	30 46 55	8.33 12.8 15.3	170 150 135		64 70 68	21.7 26.85 29.74	37	200L2-2	2.4 2.8 4.6	
6	30 46 55	8.33 12.8 15.3	204 180 162		64 70 68	26.04 32.21 35.68	37	200L2-2	2.4 2.8 4.6	
7	30 46 55	8.33 12.8 15.3	238 210 189		64 70 68	30.38 37.58 41.63	45	225M-2	2.4 2.8 4.6	
8	30 46 55	8.33 12.8 15.3	272 240 216		64 70 68	34.72 42.95 47.58	55	250M-2	2.4 2.8 4.6	
9	30 46 55	8.33 12.8 15.3	306 270 243		64 70 68	39.06 48.32 53.53	55	250M-2	2.4 2.8 4.6	
10	30 46 55	8.33 12.8 15.3	340 300 270		64 70 68	43.4 53.69 59.47	75	280S-2	2.4 2.8 4.6	

* The 3rd digit of model name 'W' indicates water application. This digit can be changed suitable for other application (Refer the model identification code).

In view of continuous developments, the information / descriptions / specifications / illustrations are subject to change without notice.

Performance Curve

HMW-46-50

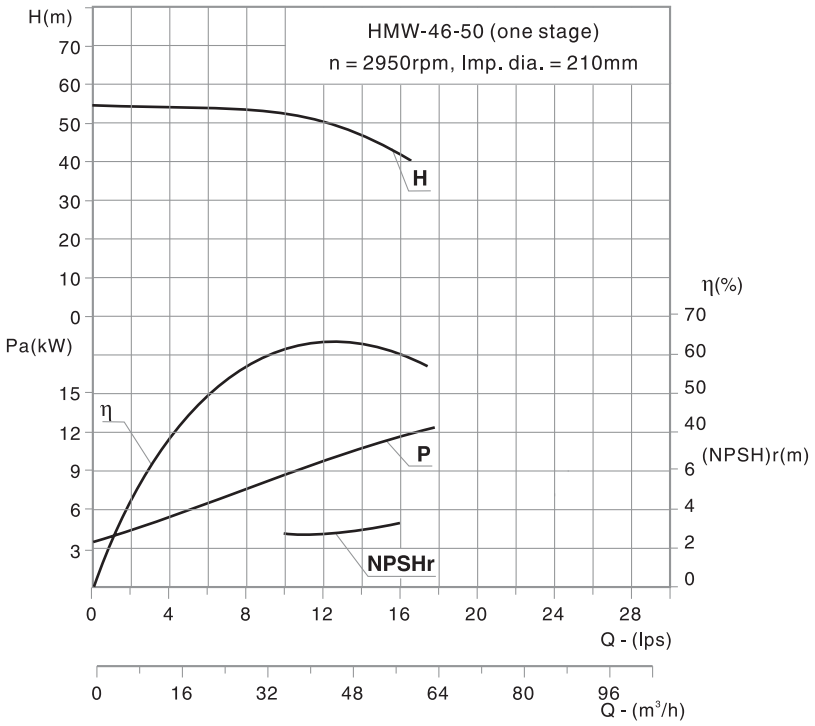

Performance Table

Stage	Q Flow		H Head	n Speed	η Eff.	N Shaft Power	Motor Power	Motor Frame Size - Pole	(NPSH)r	D Impeller Diameter
	(m^3/h)	(L/s)	(m)	(rpm)	(%)	(kW)	(kW)		(m)	(mm)
2	30 46 55	8.33 12.78 15.28	111 100 92		54 63 64	16.78 19.88 21.52	30	200L1-2	2.5 2.8 3.2	
3	30 46 55	8.33 12.78 15.28	166.5 150 138		54 63 64	25.19 29.83 32.28	37	200L2-2	2.5 2.8 3.2	
4	30 46 55	8.33 12.78 15.28	222 200 184		54 63 64	33.59 39.77 43.04	45	225M-2	2.5 2.8 3.2	
5	30 46 55	8.33 12.78 15.28	277.5 250 230		54 63 64	41.98 49.71 53.80	55	250M-2	2.5 2.8 3.2	
6	30 46 55	8.33 12.78 15.28	333 300 276		54 63 64	50.38 59.65 64.56	75	280S-2	2.5 2.8 3.2	
7	30 46 55	8.33 12.78 15.28	388.5 350 322	2950	54 63 64	58.78 69.60 75.32	90	280M-2	2.5 2.8 3.2	Ø210
8	30 46 55	8.33 12.78 15.28	444 400 368		54 63 64	67.20 79.52 86.08	90	280M-2	2.5 2.8 3.2	
9	30 46 55	8.33 12.78 15.28	499.5 450 414		54 63 64	75.56 89.48 96.84	110	315S-2	2.5 2.8 3.2	
10	30 46 55	8.33 12.78 15.28	555 500 460		54 63 64	83.97 99.42 107.60	132	315M-2	2.5 2.8 3.2	
11	30 46 55	8.33 12.78 15.28	610.5 550 506		54 63 64	92.37 109.36 118.36	132	315M-2	2.5 2.8 3.2	
12	30 46 55	8.33 12.78 15.28	666 600 552		54 63 64	100.8 119.28 129.12	132 (160)	315M-2 (315L1-2)	2.5 2.8 3.2	

* The 3rd digit of model name 'W' indicates water application. This digit can be changed suitable for other application (Refer the model identification code).

In view of continuous developments, the information / descriptions / specifications / illustrations are subject to change without notice.

Performance Curve

HMW-85-45

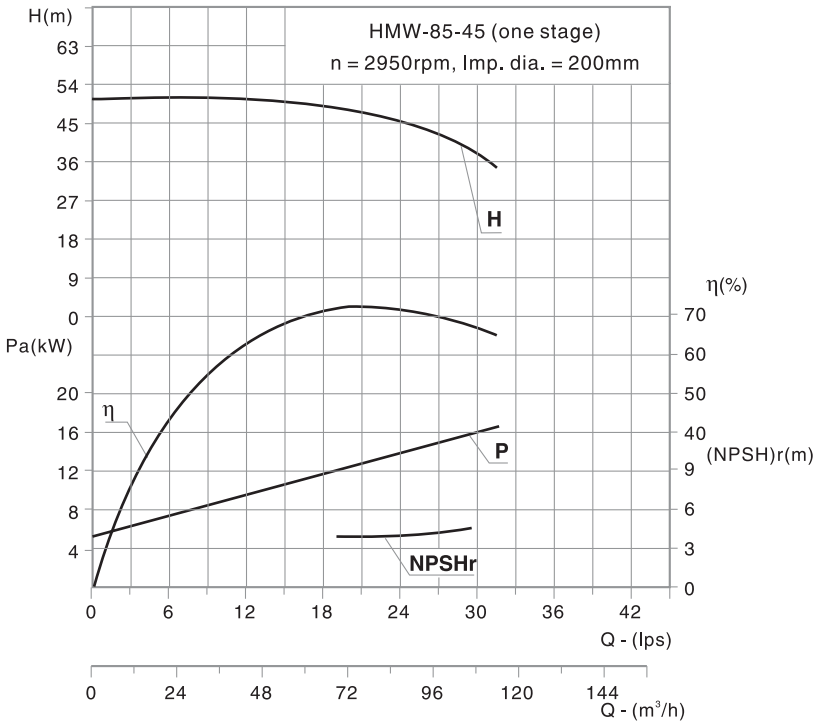

Performance Table

Stage	Q Flow		H Head	n Speed	η Eff.	N Shaft Power	Motor		(NPSH)r	D Impeller Diameter
							Power	Frame Size - Pole		
	(m^3/h)	(L/s)	(m)	(rpm)	(%)	(kW)	(kW)		(m)	(mm)
2	55 85 100	15.3 23.6 27.8	102 90 78	2950	63 72 70	24.25 28.92 30.35	37	200L2-2	3.2 4.2 5.2	Ø200
3	55 85 100	15.3 23.6 27.8	153 135 117		63 72 70	36.38 43.37 45.52	55	250M-2	3.2 4.2 5.2	
4	55 85 100	15.3 23.6 27.8	204 180 156		63 72 70	48.5 57.82 60.7	75	280S-2	3.2 4.2 5.2	
5	55 85 100	15.3 23.6 27.8	255 225 195		63 72 70	60.63 72.28 75.86	90	280M-2	3.2 4.2 5.2	
6	55 85 100	15.3 23.6 27.8	306 270 234		63 72 70	72.75 86.73 91.04	110	315S-2	3.2 4.2 5.2	
7	55 85 100	15.3 23.6 27.8	357 315 273		63 72 70	84.88 101.2 106.2	132	315M-2	3.2 4.2 5.2	
8	55 85 100	15.3 23.6 27.8	408 360 312		63 72 70	97.0 115.6 121.4	132	315M-2	3.2 4.2 5.2	
9	55 85 100	15.3 23.6 27.8	459 405 351		63 72 70	109.1 130.1 136.6	160	315L1-2	3.2 4.2 5.2	

* The 3rd digit of model name 'W' indicates water application. This digit can be changed suitable for other application (Refer the model identification code).

In view of continuous developments, the information / descriptions / specifications / illustrations are subject to change without notice.

Performance Curve

HMW-85-67

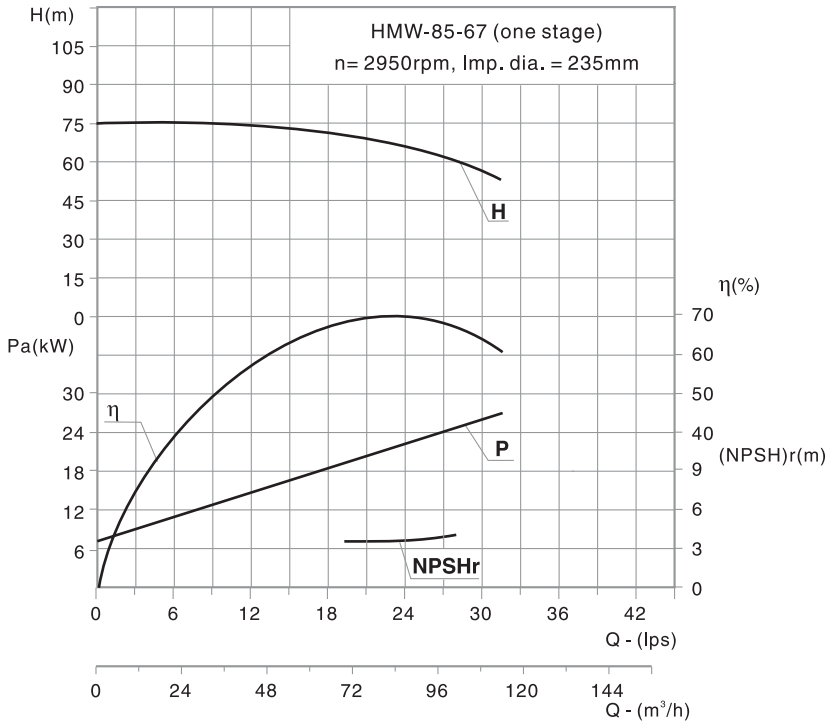

Performance Table

Stage	Q Flow		H Head	n Speed	η Eff.	N Shaft Power	Motor		(NPSH)r	D Impeller Diameter
							Power	Frame Size - Pole		
	(m^3/h)	(L/s)	(m)	(rpm)	(%)	(kW)	(kW)		(m)	(mm)
3	55 85 100	15.3 23.6 27.8	222 201 183	2950	58 68 68	57.3 68.4 73.3	90	280 M-2	3.3 4.0 4.4	Ø235
4	55 85 100	15.3 23.6 27.8	296 268 244		58 68 68	76.4 91.2 97.7	110	315S-2	3.3 4.0 4.4	
5	55 85 100	15.3 23.6 27.8	370 335 305		58 68 68	95.6 114 122.2	132	315M-2	3.3 4.0 4.4	
6	55 85 100	15.3 23.6 27.8	444 402 366		58 68 68	114.7 136.9 146.6	160	315L1-2	3.3 4.0 4.4	
7	55 85 100	15.3 23.6 27.8	518 469 427		58 68 68	133.8 159.6 171	185	315L2-2 (IP23)	3.3 4.0 4.4	
8	55 85 100	15.3 23.6 27.8	592 536 488		58 68 68	152.9 182.4 195.4	220	315M1-2	3.3 4.0 4.4	
9	55 85 100	15.3 23.6 27.8	666 603 549		58 68 68	172 205.2 219.9	250	355M2-2	3.3 4.0 4.4	

* The 3rd digit of model name 'W' indicates water application. This digit can be changed suitable for other application (Refer the model identification code).

In view of continuous developments, the information / descriptions / specifications / illustrations are subject to change without notice.

Performance Curve

HMW-120-50

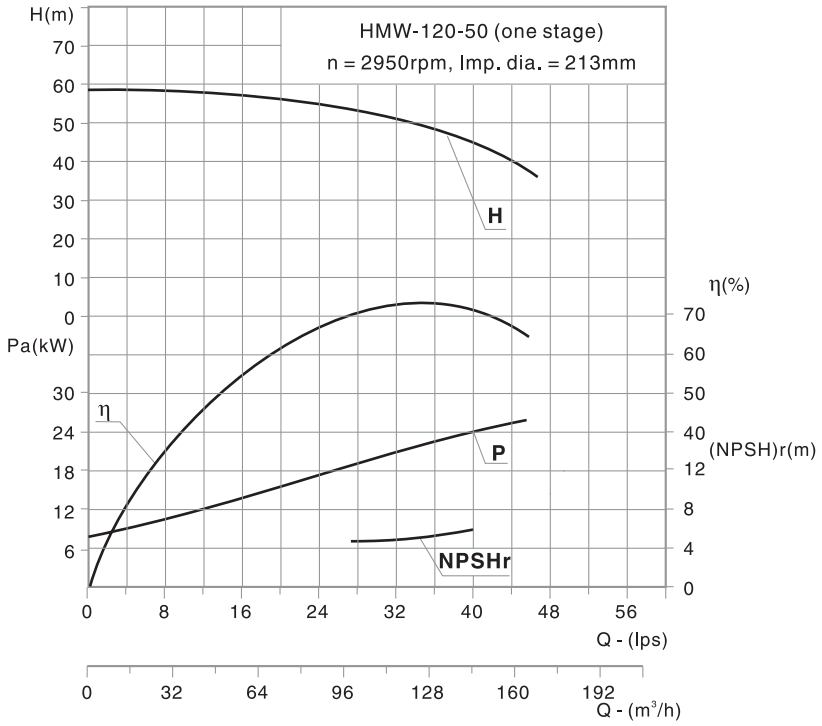

Performance Table

Stage	Q Flow		H Head	n Speed	η Eff.	N Shaft Power	Motor		(NPSH)r	D Impeller Diameter
							Power	Frame Size - Pole		
	(m^3/h)	(L/s)	(m)	(rpm)	(%)	(kW)	(kW)		(m)	(mm)
2	96	26.7	110	2950	73	39.44	55	250M-2	3.2	Ø213
	120	33.3	100		73.3	44.54			5.1	
	140	38.9	84.6		67.5	48.8			6.7	
3	96	26.7	165		73	59.09	90	280M-2	3.2	
	120	33.3	150		73.3	66.88			5.1	
	140	38.9	126.9		67.5	71.68			6.7	
4	96	26.7	220		73	78.79	110	315S-2	3.2	
	120	33.3	200		73.3	89.17			5.1	
	140	38.9	169.2		67.5	95.57			6.7	
5	96	26.7	275		73	98.49	132	315M-2	3.2	
	120	33.3	250		73.3	111.46			5.1	
	140	38.9	211.5		67.5	119.46			6.7	
6	96	26.7	330		73	118.18	160	315L1-2	3.2	
	120	33.3	300		73.3	133.75			5.1	
	140	38.9	253.8		67.5	143.36			6.7	
7	96	26.7	385		73	137.88	200	315L2-2	3.2	
	120	33.3	350		73.3	156.04			5.1	
	140	38.9	296.1		67.5	167.25			6.7	
8	96	26.7	440		73	157.58	200	315L2-2	3.2	
	120	33.3	400		73.3	178.33			5.1	
	140	38.9	338.4		67.5	191.14			6.7	
9	96	26.7	495		73	177.28	220	355M1-2	3.2	
	120	33.3	450		73.3	200.63			5.1	
	140	38.9	380.7		67.5	215.03			6.7	

* The 3rd digit of model name 'W' indicates water application. This digit can be changed suitable for other application (Refer the model identification code).

In view of continuous developments, the information / descriptions / specifications / illustrations are subject to change without notice.

Performance Curve

HMW-155-30

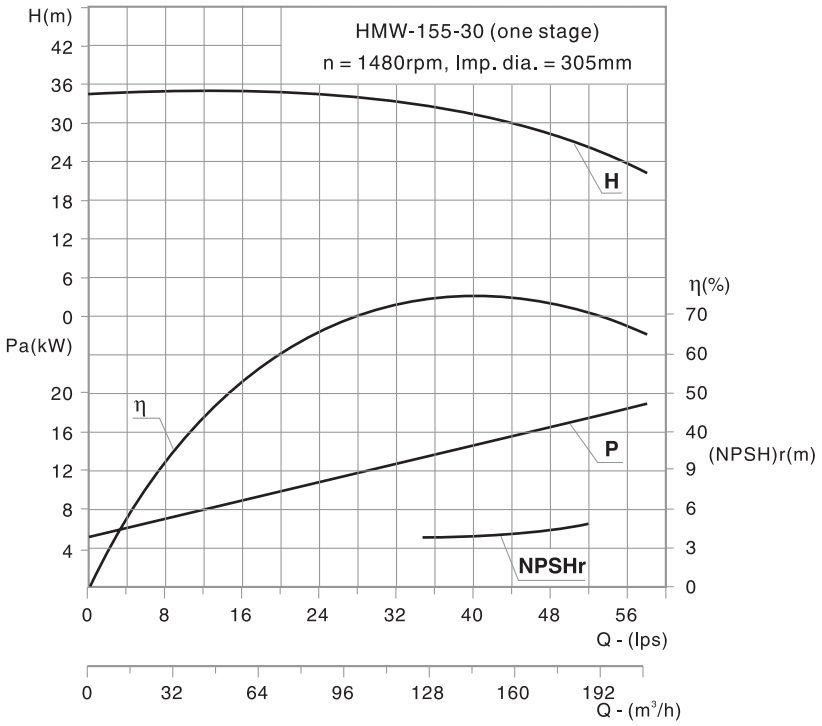

Performance Table

Stage	Q Flow		H Head	n Speed	η Eff.	N Shaft Power	Motor		(NPSH)r	D Impeller Diameter
							Power	Frame Size - Pole		
	(m^3/h)	(L/s)	(m)	(rpm)	(%)	(kW)	(kW)		(m)	(mm)
2	119	33	64	1480	69.5	29.8	45	225M-4	3.2	Ø305
	155	43	60		75	33.71			3.9	
	190	52.8	54		76	36.95			4.8	
3	119	33	96		69.5	44.7	75	280S-4	3.2	
	155	43	90		75	50.57			3.9	
	190	52.8	81		76	55.42			4.8	
4	119	33	128		69.5	59.6	90	280M-4	3.2	
	155	43	120		75	67.42			3.9	
	190	52.8	108		76	73.9			4.8	
5	119	33	160		69.5	74.5	110	315S-4	3.2	
	155	43	150		75	84.28			3.9	
	190	52.8	135		76	92.37			4.8	
6	119	33	192		69.5	89.4	132	315M-4	3.2	
	155	43	180		75	101.1			3.9	
	190	52.8	162		76	110.8			4.8	
7	119	33	224		69.5	104.3	160	315L1-4	3.2	
	155	43	210		75	118.0			3.9	
	190	52.8	189		76	129.3			4.8	
8	119	33	256		69.5	119.2	200	315L2-4	3.2	
	155	43	240		75	134.8			3.9	
	190	52.8	216		76	147.8			4.8	
9	119	33	288		69.5	134.1	200	315L2-4	3.2	
	155	43	270		75	151.7			3.9	
	190	52.8	243		76	166.3			4.8	
10	119	33	320		69.5	149	220	315M1-4	3.2	
	155	43	300		75	168.6			3.9	
	190	52.8	270		76	184.7			4.8	

* The 3rd digit of model name 'W' indicates water application. This digit can be changed suitable for other application (Refer the model identification code).

In view of continuous developments, the information / descriptions / specifications / illustrations are subject to change without notice.

Performance Curve

HMW-155-67

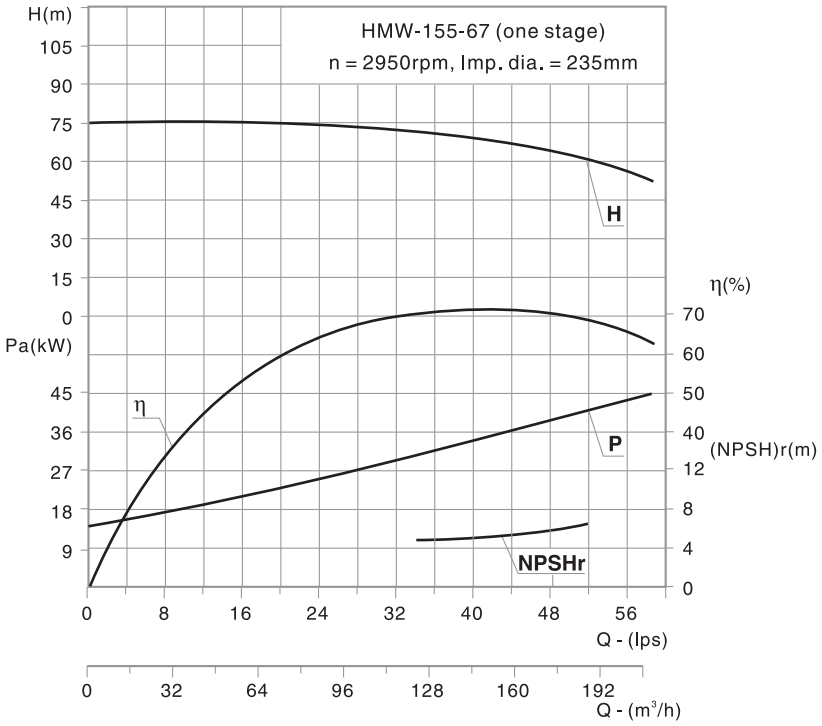

Performance Table

Stage	Q Flow		H Head	n Speed	η Eff.	N Shaft Power	Motor		(NPSH)r	D Impeller Diameter
							Power	Frame Size - Pole		
	(m^3/h)	(L/s)	(m)	(rpm)	(%)	(kW)	(kW)		(m)	(mm)
2	100	27.8	152	2950	64	64.7	90	280M-2	3.2	Ø235
	155	43.1	134		74	76.5			5.0	
	185	51.4	118		72	82.6			6.6	
3	100	27.8	228		64	97.0	132	315M-2	3.2	
	155	43.1	201		74	114.7			5.0	
	185	51.4	177		72	123.9			6.6	
4	100	27.8	304		64	129.4	185	315M1-2 (IP23)	3.2	
	155	43.1	268		74	152.9			5.0	
	185	51.4	236		72	165.1			6.6	
5	100	27.8	380		64	161.7	220	355M1-2	3.2	
	155	43.1	335		74	191.2			5.0	
	185	51.4	295		72	206.4			6.6	
6	100	27.8	456		64	194	280	355L1-2	3.2	
	155	43.1	402		74	229.5			5.0	
	185	51.4	354		72	247.7			6.6	
7	100	27.8	532		64	226.4	315	355L2-2	3.2	
	155	43.1	469		74	267.7			5.0	
	185	51.4	413		72	288.9			6.6	
8	100	27.8	608		64	258.8	355	355L1-2 (IP23)	3.2	
	155	43.1	536		74	305.9			5.0	
	185	51.4	472		72	330.2			6.6	
9	100	27.8	684		64	291.1	450	4001-2 (IP23/6kV)	3.2	
	155	43.1	603		74	344.2			5.0	
	185	51.4	531		72	371.5			6.6	

* The 3rd digit of model name 'W' indicates water application. This digit can be changed suitable for other application (Refer the model identification code).

In view of continuous developments, the information / descriptions / specifications / illustrations are subject to change without notice.

Performance Curve

HMW-280-43

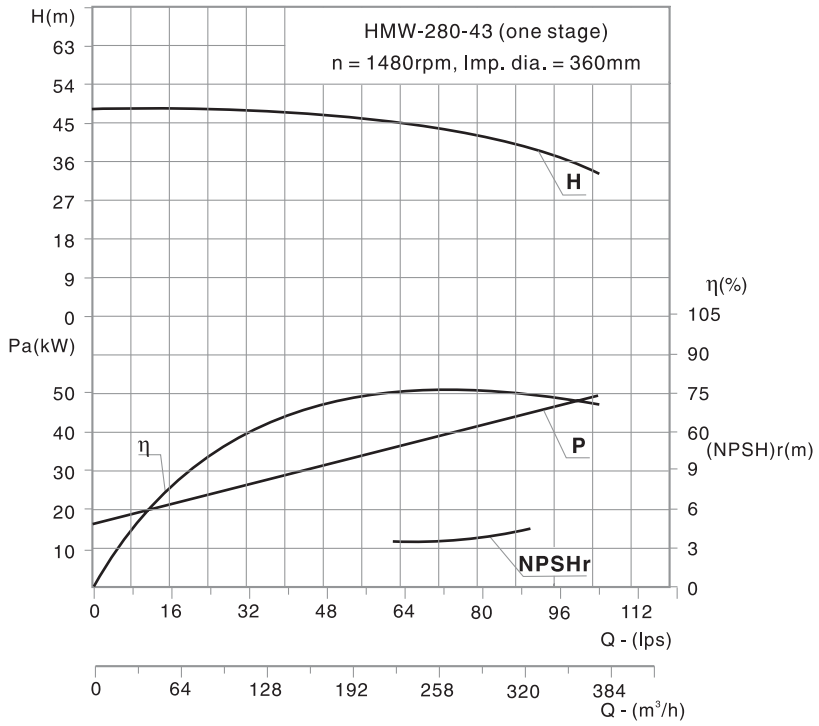

Performance Table

Stage	Q Flow		H Head	n Speed	η Eff.	N Shaft Power	Motor		(NPSH)r	D Impeller Diameter
							Power	Frame Size - Pole		
	(m^3/h)	(L/s)	(m)	(rpm)	(%)	(kW)	(kW)		(m)	(mm)
2	185	51.4	94	1480	69	68.6	110	315S-4	2.5	Ø360
	280	77.8	86		77	85.2			4.0	
	335	93.1	76		75	92.5			5.2	
3	185	51.4	141		69	102.9	160	315L1-4	2.5	
	280	77.8	129		77	127.7			4.0	
	335	93.1	114		75	138.8			5.2	
4	185	51.4	188		69	137.7	200	315L2-4	2.5	
	280	77.8	172		77	170.3			4.0	
	335	93.1	152		75	185.0			5.2	
5	185	51.4	235		69	171.6	250	355M2-4	2.5	
	280	77.8	215		77	212.9			4.0	
	335	93.1	190		75	231.3			5.2	
6	185	51.4	282		69	205.9	315	355L2-4	2.5	
	280	77.8	258		77	255.5			4.0	
	335	93.1	228		75	277.5			5.2	
7	185	51.4	329		69	240.2	355	4001-4 (IP23/6kV)	2.5	
	280	77.8	301		77	298.1			4.0	
	335	93.1	266		75	323.8			5.2	
8	185	51.4	376		69	274.5	450	4003-4 (IP23/6kV)	2.5	
	280	77.8	344		77	340.7			4.0	
	335	93.1	304		75	370.0			5.2	
9	185	51.4	423		69	308.8	450	4003-4 (IP23/6kV)	2.5	
	280	77.8	387		77	383.3			4.0	
	335	93.1	342		75	416.3			5.2	

* The 3rd digit of model name 'W' indicates water application. This digit can be changed suitable for other application (Refer the model identification code).

In view of continuous developments, the information / descriptions / specifications / illustrations are subject to change without notice.

Performance Curve

HMW-280-65

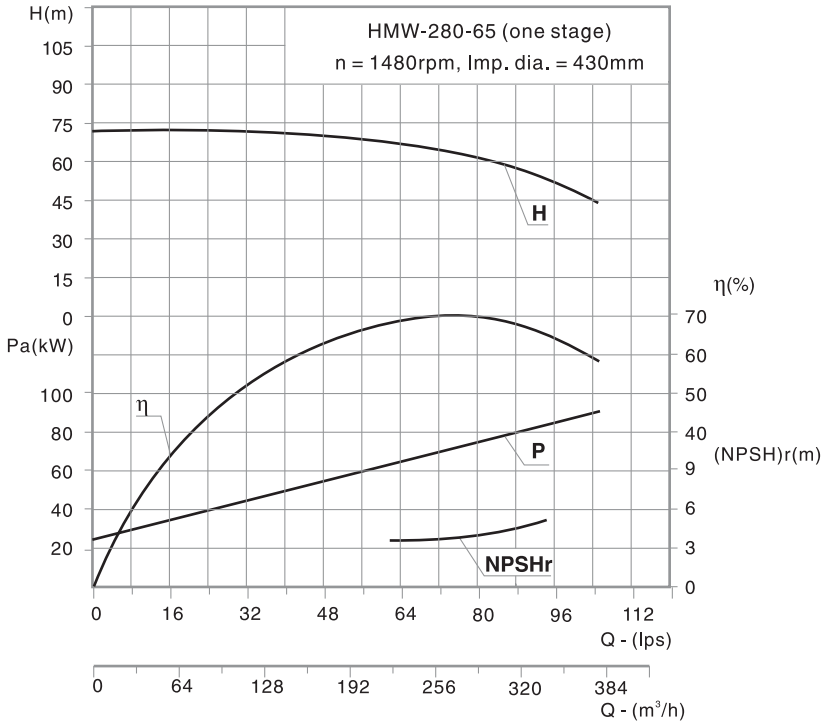

Performance Table

Stage	Q Flow		H Head	n Speed	η Eff.	N Shaft Power	Motor Power	Motor Frame Size - Pole	(NPSH)r	D Impeller Diameter
	(m^3/h)	(L/s)	(m)	(rpm)	(%)	(kW)	(kW)		(m)	(mm)
3	185 280 335	51.4 77.8 93.1	204 195 186	1480	57 69 71	180 215 239	280	3555-4 (IP23/6kV)	2.8 3.7 5.0	Ø430
4	185 280 335	51.4 77.8 93.1	272 260 248		57 69 71	240 287 319	355	4001-4 (IP23/6kV)	2.8 3.7 5.0	
5	185 280 335	51.4 77.8 93.1	340 325 310		57 69 71	300 359 398	450	4003-4 (IP23/6kV)	2.8 3.7 5.0	
6	185 280 335	51.4 77.8 93.1	408 390 372		57 69 71	361 431 478	500	4004-4 (IP23/6kV)	2.8 3.7 5.0	
7	185 280 335	51.4 77.8 93.1	476 455 434		57 69 71	421 503 558	630	4501-4 (IP23/6kV)	2.8 3.7 5.0	
8	185 280 335	51.4 77.8 93.1	544 520 496		57 69 71	481 575 637	710	4502-4 (IP23/6kV)	2.8 3.7 5.0	
9	185 280 335	51.4 77.8 93.1	612 585 558		57 69 71	541 646 717	800	4503-4 (IP23/6kV)	2.8 3.7 5.0	
10	185 280 335	51.4 77.8 93.1	680 650 620		57 69 71	601 718 797	900	4504-4 (IP23/6kV)	2.8 3.7 5.0	

* The 3rd digit of model name 'W' indicates water application. This digit can be changed suitable for other application (Refer the model identification code).
In view of continuous developments, the information / descriptions / specifications / illustrations are subject to change without notice.

Performance Curve

HMW-360-40

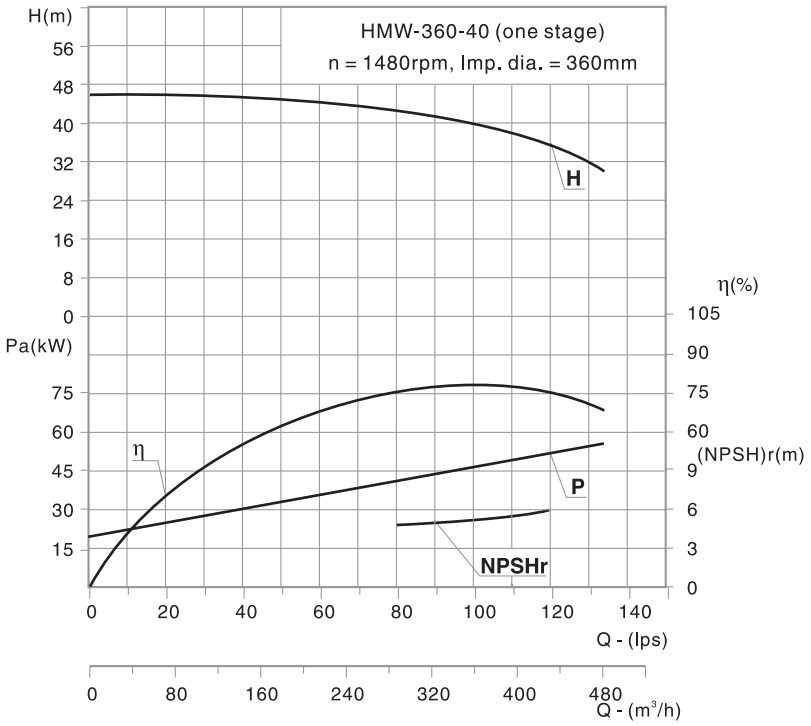

Performance Table

Stage	Q Flow		H Head	n Speed	η Eff.	N Shaft Power	Motor Power	Motor Frame Size - Pole	(NPSH)r	D Impeller Diameter
	(m^3/h)	(L/s)	(m)	(rpm)	(%)	(kW)	(kW)		(m)	(mm)
2	300 360 440	83.3 100 122.2	84 80 71	1480	77 80 77	89.1 98.1 110.5	132	315M1-4	4.65 4.7 5.4	Ø360
3	300 360 440	83.3 100 122.2	126 120 106.5		77 80 77	133.7 147.2 165.8	185	315M1-4 (IP23)	4.65 4.7 5.4	
4	300 360 440	83.3 100 122.2	168 160 142		77 80 77	178.2 196.2 221.1	250	355M2-4	4.65 4.7 5.4	
5	300 360 440	83.3 100 122.2	210 200 177.5		77 80 77	222.8 245.3 276.3	315	355L2-4	4.65 4.7 5.4	
6	300 360 440	83.3 100 122.2	252 240 213		77 80 77	257.4 294.1 331.5	400	4002-4 (IP23/6kV)	4.65 4.7 5.4	
7	300 360 440	83.3 100 122.2	294 280 248.5		77 80 77	311.9 343.1 386.7	450	4003-4 (IP23/6kV)	4.65 4.7 5.4	
8	300 360 440	83.3 100 122.2	336 320 284		77 80 77	356.5 392.2 441.9	500	4004-4 (IP23/6kV)	4.65 4.7 5.4	
9	300 360 440	83.3 100 122.2	378 360 319.5		77 80 77	401.1 441.2 497.2	560	4005-4 (IP23/6kV)	4.65 4.7 5.4	
10	300 360 440	83.3 100 122.2	420 400 355		77 80 77	445.6 490.2 552.4	630	4501-4 (IP23/6kV)	4.65 4.7 5.4	

* The 3rd digit of model name 'W' indicates water application. This digit can be changed suitable for other application (Refer the model identification code).

In view of continuous developments, the information / descriptions / specifications / illustrations are subject to change without notice.

Performance Curve

HMW-450-60

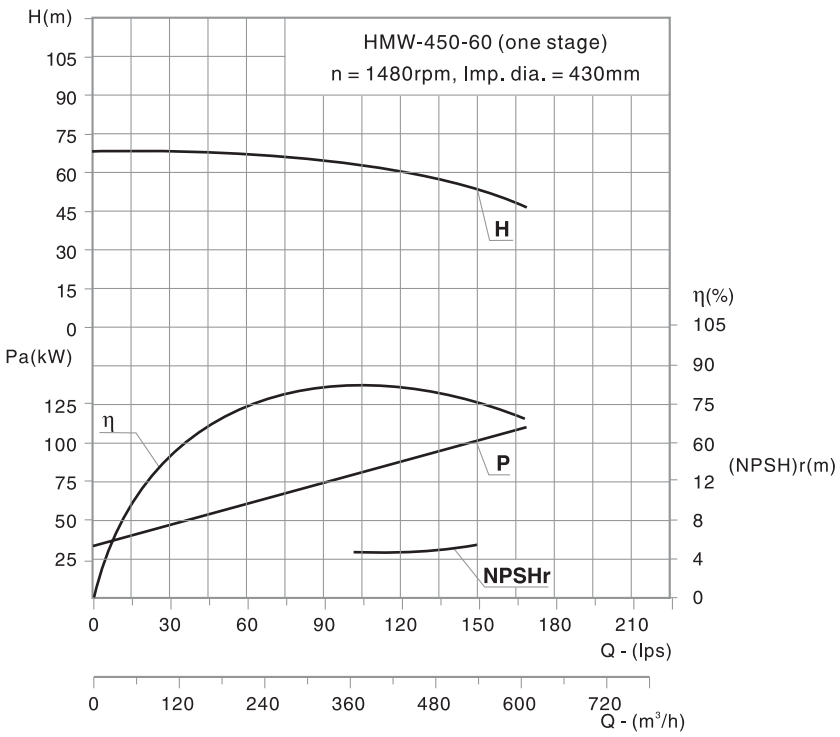

Performance Table

Stage	Q Flow		H Head	n Speed	η Eff.	N Shaft Power	Motor Power	Motor Frame Size - Pole	(NPSH)r	D Impeller Diameter
	(m^3/h)	(L/s)	(m)	(rpm)	(%)	(kW)	(kW)		(m)	(mm)
2	335 450 500	93.1 125 138.9	130 120 113	1480	72 79 78	164.7 186.1 197.3	250	3554-4 (IP23/6kV)	4.1 5.2 6.3	Ø430
3	335 450 500	93.1 125 138.9	195 180 171		72 79 78	247.1 279.2 296.0	355	4001-4 (IP23/6kV)	4.1 5.2 6.3	
4	335 450 500	93.1 125 138.9	260 240 228		72 79 78	329.5 372.2 394.7	500	4004-4 (IP23/6kV)	4.1 5.2 6.3	
5	335 450 500	93.1 125 138.9	325 300 285		72 79 78	411.8 465.4 493.4	630	4501-4 (IP23/6kV)	4.1 5.2 6.3	
6	335 450 500	93.1 125 138.9	390 360 342		72 79 78	494.2 558.3 592.0	710	4502-4 (IP23/6kV)	4.1 5.2 6.3	
7	335 450 500	93.1 125 138.9	455 420 399		72 79 78	576.5 651.5 690.7	800	4503-4 (IP23/6kV)	4.1 5.2 6.3	
8	335 450 500	93.1 125 138.9	520 480 456		72 79 78	658.9 744.4 789.4	900	4504-4 (IP23/6kV)	4.1 5.2 6.3	
9	335 450 500	93.1 125 138.9	585 540 513		72 79 78	741.2 837.5 888.0	1000	5001-4 (IP23/6kV)	4.1 5.2 6.3	
10	335 450 500	93.1 125 138.9	650 600 570		72 79 78	823.6 930.8 995.1	1120	5002-4 (IP23/6kV)	4.1 5.2 6.3	

* The 3rd digit of model name 'W' indicates water application. This digit can be changed suitable for other application (Refer the model identification code).

In view of continuous developments, the information / descriptions / specifications / illustrations are subject to change without notice.

Performance Curve

HMW-550-50

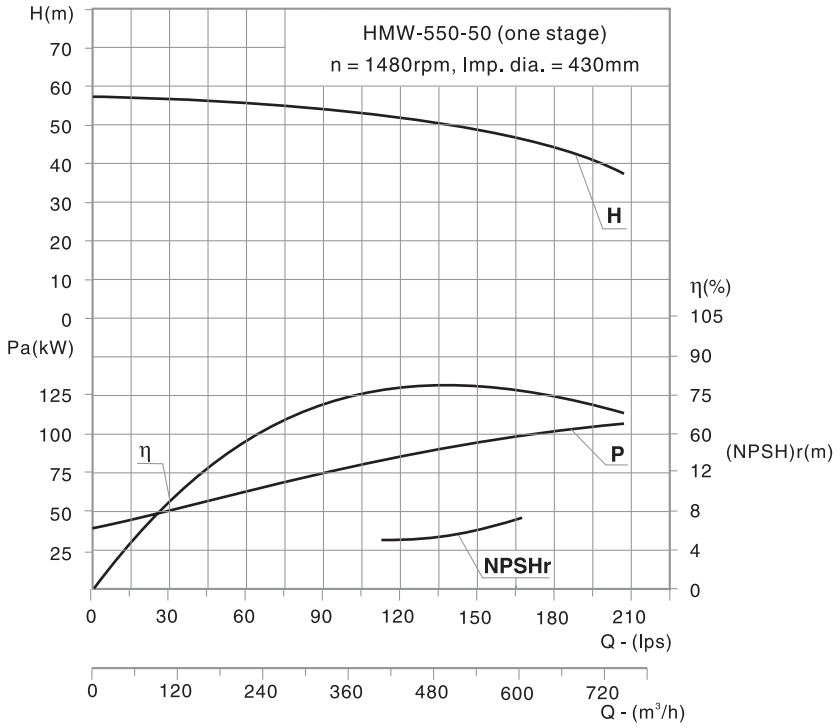

Performance Table

Stage	Q Flow		H Head	n Speed	η Eff.	N Shaft Power	Motor		(NPSH)r	D Impeller Diameter
							Power	Frame Size - Pole		
	(m^3/h)	(L/s)	(m)	(rpm)	(%)	(kW)	(kW)		(m)	(mm)
2	450 550 590	125 152.7 163.9	120 100 90	1480	78 79 75	188.5 189.6 192.7	250	3554-4 (IP23/6kV)	5.2 5.8 6.5	Ø430
3	450 550 590	125 152.7 163.9	180 150 135		78 79 75	282.8 284.3 289.1	355	4001-4 (IP23/6kV)	5.2 5.8 6.5	
4	450 550 590	125 152.7 163.9	240 200 180		78 79 75	376.9 378.9 385.4	450	4003-4 (IP23/6kV)	5.2 5.8 6.5	
5	450 550 590	125 152.7 163.9	300 250 225		78 79 75	471.3 473.8 481.8	560	4005-4 (IP23/6kV)	5.2 5.8 6.5	
6	450 550 590	125 152.7 163.9	360 300 270		78 79 75	565.5 568.5 578.1	710	4502-4 (IP23/6kV)	5.2 5.8 6.5	
7	450 550 590	125 152.7 163.9	420 350 315		78 79 75	659.8 663.3 674.5	800	4503-4 (IP23/6kV)	5.2 5.8 6.5	
8	450 550 590	125 152.7 163.9	480 400 360		78 79 75	754.0 758.0 770.8	900	4504-4 (IP23/6kV)	5.2 5.8 6.5	
9	450 550 590	125 152.7 163.9	540 450 405		78 79 75	848.3 852.8 867.2	1000	5003/4 (IP23/6kV)	5.2 5.8 6.5	

* The 3rd digit of model name 'W' indicates water application. This digit can be changed suitable for other application (Refer the model identification code).

In view of continuous developments, the information / descriptions / specifications / illustrations are subject to change without notice.

Performance Curve

HMW-650-70

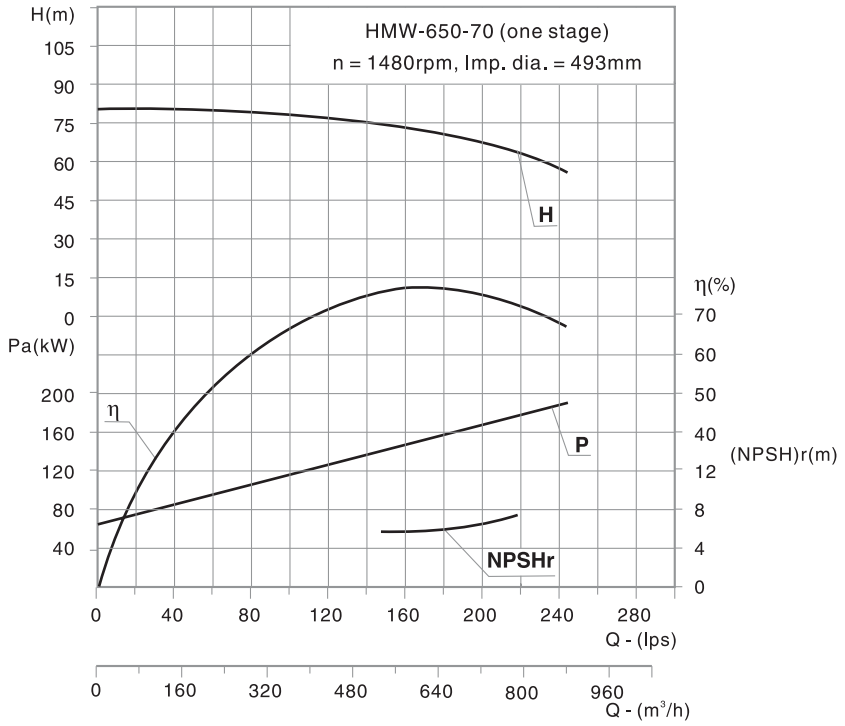

Performance Table

Stage	Q Flow		H Head	n Speed	η Eff.	N Shaft Power	Motor		(NPSH)r	D Impeller Diameter
							Power	Frame Size - Pole		
	(m^3/h)	(L/s)	(m)	(rpm)	(%)	(kW)	(kW)		(m)	(mm)
2	550 650 750	152.8 180.6 208.3	147 140 120	1480	75 76.5 75	293.5 323.8 326.7	400	4002-4 (IP23/6kV)	5.8 6.2 6.5	Ø493
3	550 650 750	152.8 180.6 208.3	220.5 210 180		75 76.5 75	440.2 485.7 490.0	560	4005-5 (IP23/6kV)	5.8 6.2 6.5	
4	550 650 750	152.8 180.6 208.3	294 280 240		75 76.5 75	586.9 647.6 653.3	710	4502-4 (IP23/6kV)	5.8 6.2 6.5	
5	550 650 750	152.8 180.6 208.3	367.5 350 300		75 76.5 75	733.6 809.5 816.7	900	4504-4 (IP23/6kV)	5.8 6.2 6.5	
6	550 650 750	152.8 180.6 208.3	441 420 360		75 76.5 75	880.4 971.5 980.0	1120	5002-4 (IP23/6kV)	5.8 6.2 6.5	
7	550 650 750	152.8 180.6 208.3	514.5 490 420		75 76.5 75	1027.1 1133.4 1143.3	1250	5003-4 (IP23/6kV)	5.8 6.2 6.5	
8	550 650 750	152.8 180.6 208.3	588 560 480		75 76.5 75	1173.8 1295.3 1306.7	1600	5603-4 (IP23/6kV)	5.8 6.2 6.5	

* The 3rd digit of model name 'W' indicates water application. This digit can be changed suitable for other application (Refer the model identification code).

In view of continuous developments, the information / descriptions / specifications / illustrations are subject to change without notice.

Performance Curve

HMW-740-80

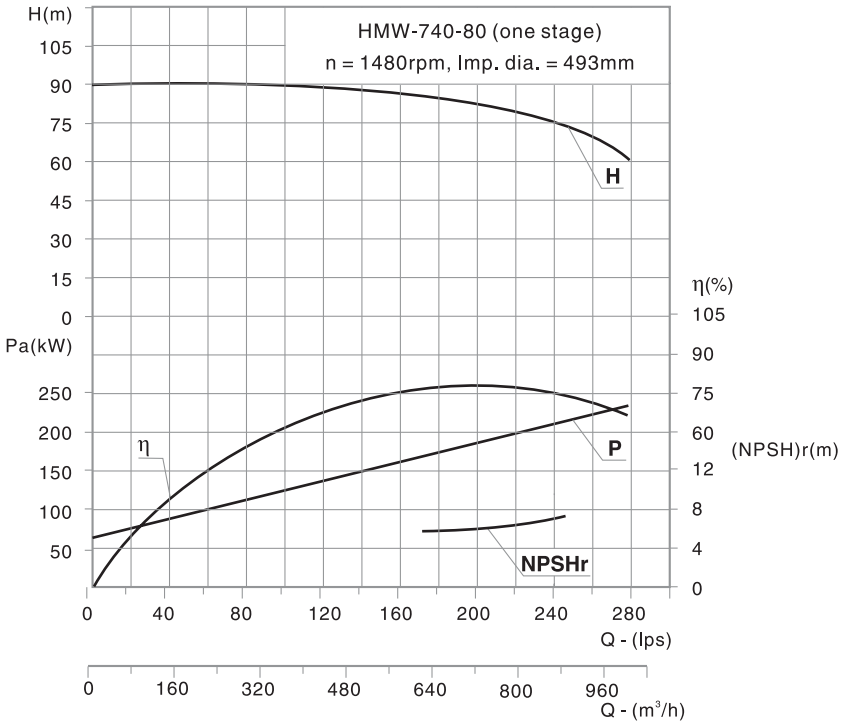

Performance Table

Stage	Q Flow		H Head	n Speed	η Eff.	N Shaft Power	Motor		(NPSH)r	D Impeller Diameter
							Power	Frame Size - Pole		
	(m^3/h)	(L/s)	(m)	(rpm)	(%)	(kW)	(kW)		(m)	(mm)
2	640 740 840	168.4 160 146.6	168.4 160 146.6	1480	77.5 78.4 77.3	378.5 411.2 433.6	500	4004-4 (IP23/6kV)	5.8 6.2 6.5	Ø493
3	640 740 840	168.4 160 146.6	252.6 240 219.9		77.5 78.4 77.3	567.9 616.8 650.4	710	4502-4 (IP23/6kV)	5.8 6.2 6.5	
4	640 740 840	168.4 160 146.6	336.8 320 293.2		77.5 78.4 77.3	757.2 822.4 867.2	1000	5001-4 (IP23/6kV)	5.8 6.2 6.5	
5	640 740 840	168.4 160 146.6	421 400 366.5		77.5 78.4 77.3	946.5 1028 1084	1250	5003-4 (IP23/6kV)	5.8 6.2 6.5	
6	640 740 840	168.4 160 146.6	505.2 480 439.8		77.5 78.4 77.3	1135.8 1233.6 1300.8	1600	5603-4 (IP23/10kV)	5.8 6.2 6.5	

* The 3rd digit of model name 'W' indicates water application. This digit can be changed suitable for other application (Refer the model identification code).

In view of continuous developments, the information / descriptions / specifications / illustrations are subject to change without notice.

Performance Curve

HMW-80-12

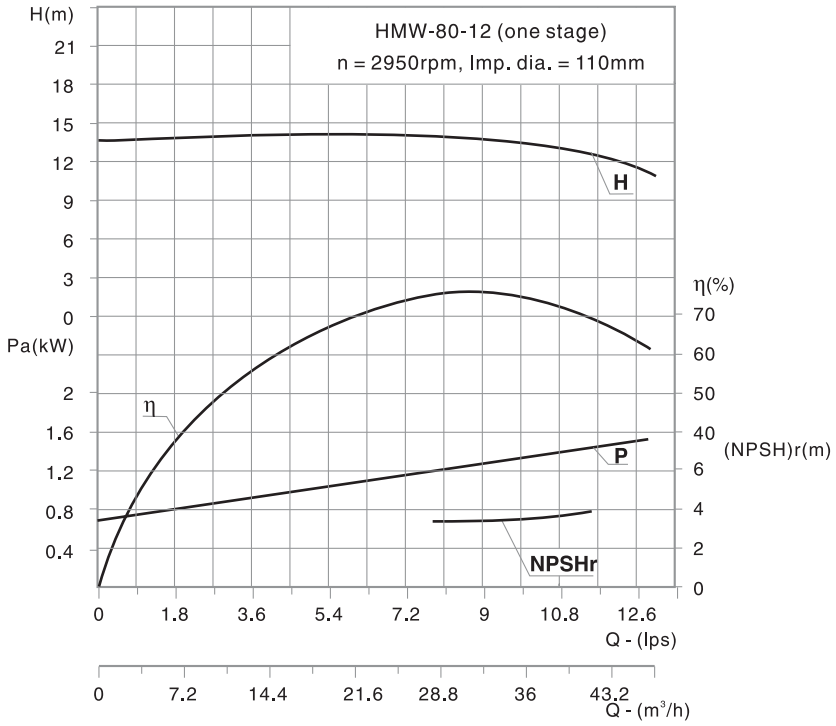

Performance Table

Stage	Q Flow		H Head	n Speed	η Eff.	N Shaft Power	Motor		(NPSH)r	D Impeller Diameter
							Power	Frame Size - Pole		
	(m^3/h)	(L/s)	(m)	(rpm)	(%)	(kW)	(kW)		(m)	(mm)
2	21.6	6.0	28.8	2950	69	2.46	4	112M-2	3.2	Ø110
	34.6	9.6	22.8		75	2.84			3.3	
	39.6	11	19.0		72	2.82			3.4	
3	21.6	6.0	43.2		69	3.69	5.5	132S1-2	3.2	
	34.6	9.6	34.2		75	4.26			3.3	
	39.6	11	28.5		72	4.23			3.4	
4	21.6	6.0	57.6		69	4.92	7.5	132S2-2	3.2	
	34.6	9.6	45.6		75	5.69			3.3	
	39.6	11	38.0		72	5.64			3.4	
5	21.6	6.0	72.0		69	6.15	11	160M1-2	3.2	
	34.6	9.6	57.0		75	7.10			3.3	
	39.6	11	47.5		72	7.05			3.4	
6	21.6	6.0	86.4		69	7.38	11	160M1-2	3.2	
	34.6	9.6	68.4		75	8.52			3.3	
	39.6	11	57.0		72	8.46			3.4	
7	21.6	6.0	100.8		69	8.61	15	160M2-2	3.2	
	34.6	9.6	79.8		75	9.94			3.3	
	39.6	11	66.5		72	9.87			3.4	
8	21.6	6.0	115.2		69	9.84	15	160M2-2	3.2	
	34.6	9.6	91.2		75	11.36			3.3	
	39.6	11	76.0		72	11.28			3.4	
9	21.6	6.0	129.6		69	11.07	18.5	160L-2	3.2	
	34.6	9.6	102.6		75	12.78			3.3	
	39.6	11	85.5		72	12.69			3.4	

* The 3rd digit of model name 'W' indicates water application. This digit can be changed suitable for other application (Refer the model identification code).

In view of continuous developments, the information / descriptions / specifications / illustrations are subject to change without notice.

Performance Curve

HMW-80-30

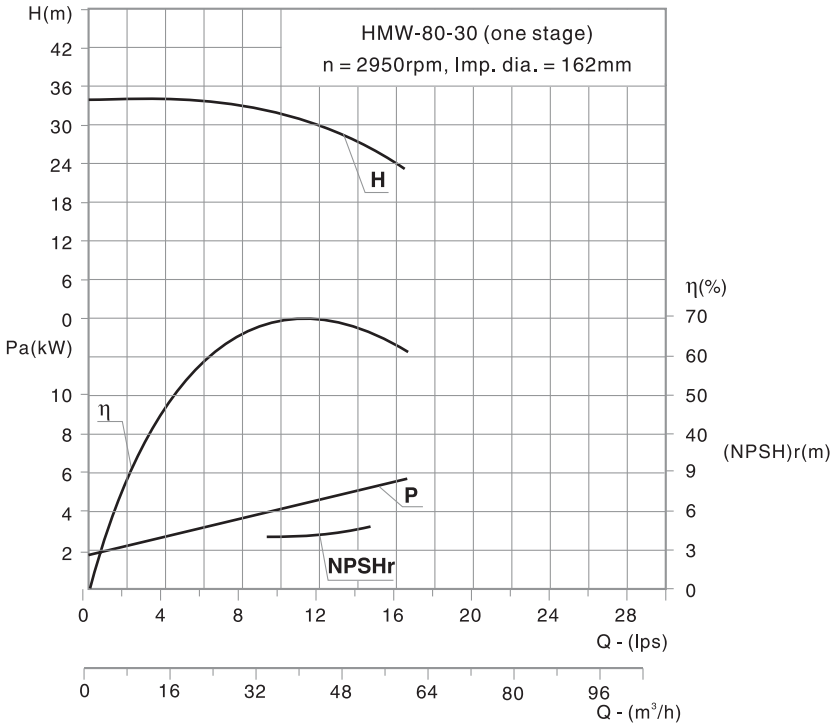

Performance Table

Stage	Q Flow		H Head	n Speed	η Eff.	N Shaft Power	Motor		(NPSH)r	D Impeller Diameter
							Power	Frame Size - Pole		
	(m^3/h)	(L/s)	(m)	(rpm)	(%)	(kW)	(kW)		(m)	(mm)
3	26 43 48	7.22 11.94 13.33	102 90 83	2950	60 70 69	12.0 15.1 15.7	18.5	160L-2	3.0 3.9 4.3	Ø162
4	26 43 48	7.22 11.94 13.33	136 120 111		60 70 69	16.0 20.1 20.96	22	180M-2	3.0 3.9 4.3	
5	26 43 48	7.22 11.94 13.33	170 150 139		60 70 69	20.1 25.2 26.2	30	200L1-2	3.0 3.9 4.3	
6	26 43 48	7.22 11.94 13.33	204 180 167		60 70 69	24.1 30.2 31.44	37	200L2-2	3.0 3.9 4.3	
7	26 43 48	7.22 11.94 13.33	238 210 195		60 70 69	28.1 35.2 36.68	45	225M-2	3.0 3.9 4.3	
8	26 43 48	7.22 11.94 13.33	272 240 222		60 70 69	32.1 40.2 41.96	55	250M-2	3.0 3.9 4.3	
9	26 43 48	7.22 11.94 13.33	306 270 250		60 70 69	36.1 45.3 47.16	55	250M-2	3.0 3.9 4.3	
10	26 43 48	7.22 11.94 13.33	340 300 278		60 70 69	40.1 50.3 53.0	55	250M-2	3.0 3.9 4.3	

* The 3rd digit of model name 'W' indicates water application. This digit can be changed suitable for other application (Refer the model identification code).

In view of continuous developments, the information / descriptions / specifications / illustrations are subject to change without notice.

Performance Curve

HMW-100-16

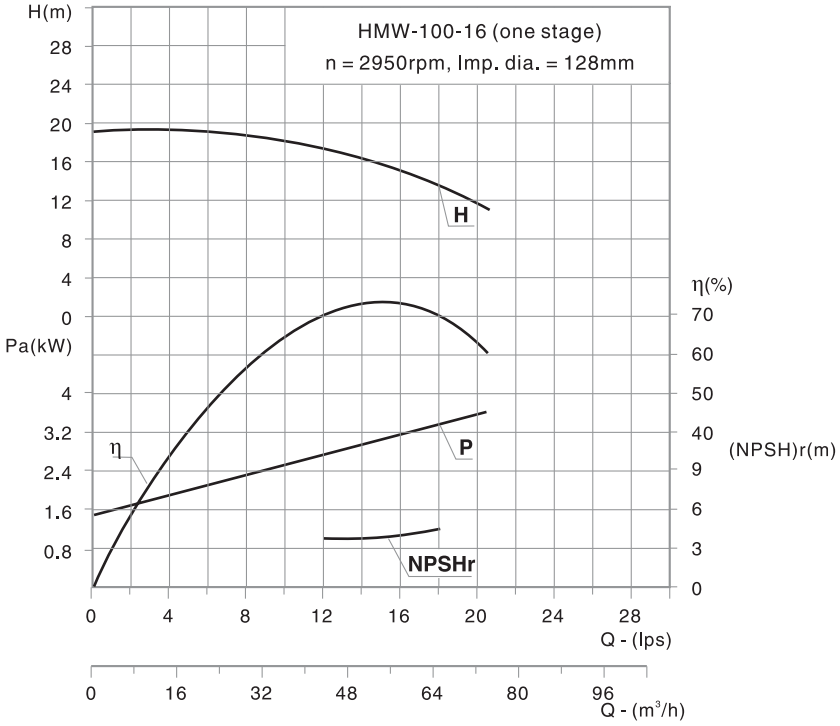

Performance Table

Stage	Q Flow		H Head	n Speed	η Eff.	N Shaft Power	Motor		(NPSH)r	D Impeller Diameter
							Power	Frame Size - Pole		
	(m^3/h)	(L/s)	(m)	(rpm)	(%)	(kW)	(kW)		(m)	(mm)
2	36 54.0 72.0	10 15 20	40 32 22	2950	66 73 66	5.94 6.44 6.53	7.5	132S2-2	3.7 3.9 4.3	Ø128
3	36 54.0 72.0	10 15 20	60 48 34		66 73 66	8.91 9.67 9.80	15	160M2-2	3.7 3.9 4.3	
4	36 54.0 72.0	10 15 20	80 64 45		66 73 66	11.88 12.89 13.07	18.5	160L-2	3.7 3.9 4.3	
5	36 54.0 72.0	10 15 20	100 80 56		66 73 66	14.85 16.11 16.33	22	180M-2	3.7 3.9 4.3	
6	36 54.0 72.0	10 15 20	120 96 67		66 73 66	17.82 19.33 19.60	22	180M-2	3.7 3.9 4.3	
7	36 54.0 72.0	10 15 20	140 112 78		66 73 66	20.79 22.55 22.87	30	200L1-2	3.7 3.9 4.3	
8	36 54.0 72.0	10 15 20	160 128 90		66 73 66	23.76 25.78 26.13	30	200L1-2	3.7 3.9 4.3	
9	36 54.0 72.0	10 15 20	180 144 101		66 73 66	26.73 29.00 29.40	37	200L2-2	3.7 3.9 4.3	

* The 3rd digit of model name 'W' indicates water application. This digit can be changed suitable for other application (Refer the model identification code).
In view of continuous developments, the information / descriptions / specifications / illustrations are subject to change without notice.

Performance Curve

HMW-100-45

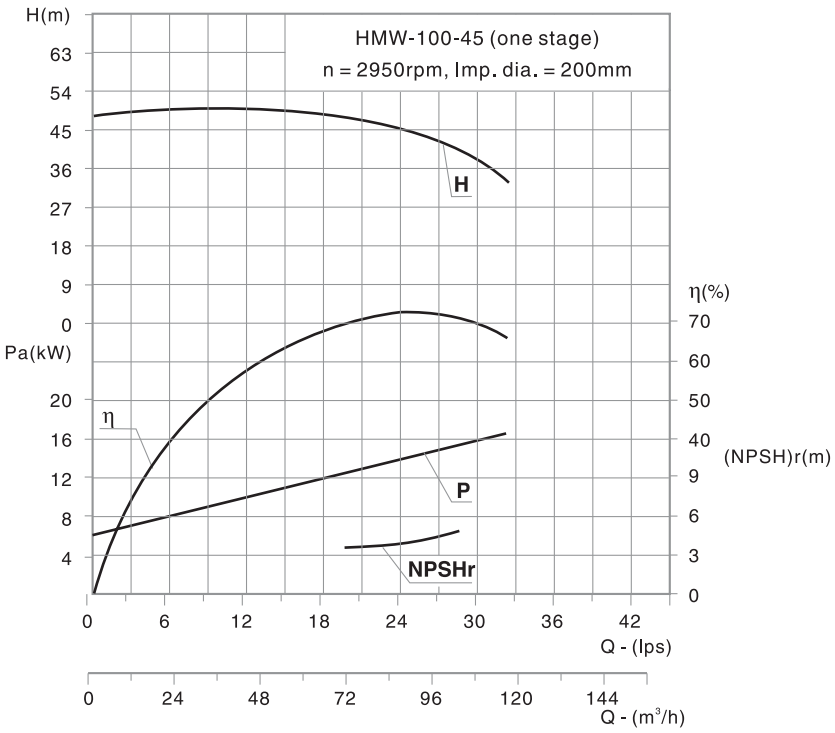

Performance Table

Stage	Q Flow		H Head	n Speed	η Eff.	N Shaft Power	Motor		(NPSH)r	D Impeller Diameter
							Power	Frame Size - Pole		
	(m^3/h)	(L/s)	(m)	(rpm)	(%)	(kW)	(kW)		(m)	(mm)
2	55 85 100	15.3 23.6 27.8	102 90 78	2950	63 72 70	24.25 28.92 30.35	37	200L2-2	3.2 4.2 5.2	Ø200
3	55 85 100	15.3 23.6 27.8	153 135 117		63 72 70	36.38 43.37 45.52	55	250M-2	3.2 4.2 5.2	
4	55 85 100	15.3 23.6 27.8	204 180 156		63 72 70	48.5 57.82 60.7	75	280S-2	3.2 4.2 5.2	
5	55 85 100	15.3 23.6 27.8	255 225 195		63 72 70	60.63 72.28 75.86	90	280M-2	3.2 4.2 5.2	
6	55 85 100	15.3 23.6 27.8	306 270 234		63 72 70	72.75 86.73 91.04	110	315S-2	3.2 4.2 5.2	
7	55 85 100	15.3 23.6 27.8	357 315 273		63 72 70	84.88 101.2 106.2	132	315M-2	3.2 4.2 5.2	
8	55 85 100	15.3 23.6 27.8	408 360 312		63 72 70	97.0 115.6 121.4	132	315M-2	3.2 4.2 5.2	
9	55 85 100	15.3 23.6 27.8	459 405 351		63 72 70	109.1 130.1 136.6	160	315L1-2	3.2 4.2 5.2	

* The 3rd digit of model name 'W' indicates water application. This digit can be changed suitable for other application (Refer the model identification code).

In view of continuous developments, the information / descriptions / specifications / illustrations are subject to change without notice.

Performance Curve

HMW-125-25

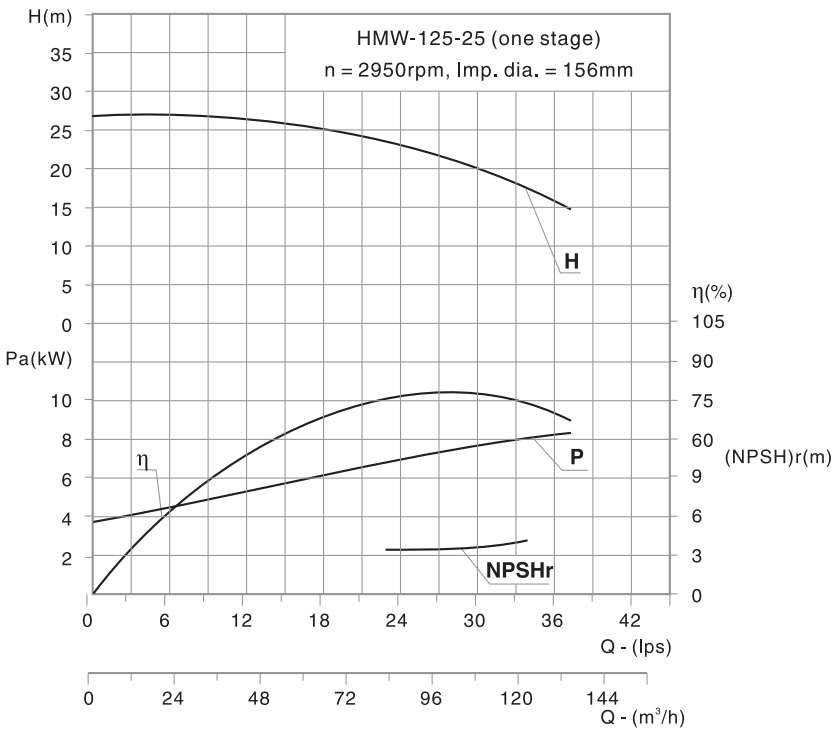

Performance Table

Stage	Q Flow		H Head	n Speed	η Eff.	N Shaft Power	Motor Power	Motor Frame Size - Pole	(NPSH)r	D Impeller Diameter
	(m^3/h)	(L/s)	(m)	(rpm)	(%)	(kW)	(kW)		(m)	(mm)
2	72 101 119	20 28 33	51.2 43.0 35.0	2950	70.5 77.5 77.0	14.20 15.20 15.30	22	180M-2	3.2 3.6 4.3	Ø156
3	72 101 119	20 28 33	76.8 64.5 52.5		70.5 77.5 77.0	21.30 22.80 22.90	30	200L1-2	3.2 3.6 4.3	
4	72 101 119	20 28 33	102.4 86.0 70.0		70.5 77.5 77.0	28.40 30.40 30.60	37	200L2-2	3.2 3.6 4.3	
5	72 101 119	20 28 33	128.0 107.5 87.5		70.5 77.5 77.0	35.50 38.00 38.25	45	225M-2	3.2 3.6 4.3	
6	72 101 119	20 28 33	153.6 129.0 105.0		70.5 77.5 77.0	42.60 45.60 45.90	55	250M-2	3.2 3.6 4.3	
7	72 101 119	20 28 33	179.2 150.5 122.5		70.5 77.5 77.0	49.70 53.20 53.55	75	280S-2	3.2 3.6 4.3	
8	72 101 119	20 28 33	204.8 172.0 140.0		70.5 77.5 77.0	56.80 60.80 61.20	75	280S-2	3.2 3.6 4.3	
9	72 101 119	20 28 33	230.4 193.5 157.5		70.5 77.5 77.0	63.90 68.40 68.85	90	280M-2	3.2 3.6 4.3	

* The 3rd digit of model name 'W' indicates water application. This digit can be changed suitable for other application (Refer the model identification code).

In view of continuous developments, the information / descriptions / specifications / illustrations are subject to change without notice.

Performance Curve

HMW-150-30

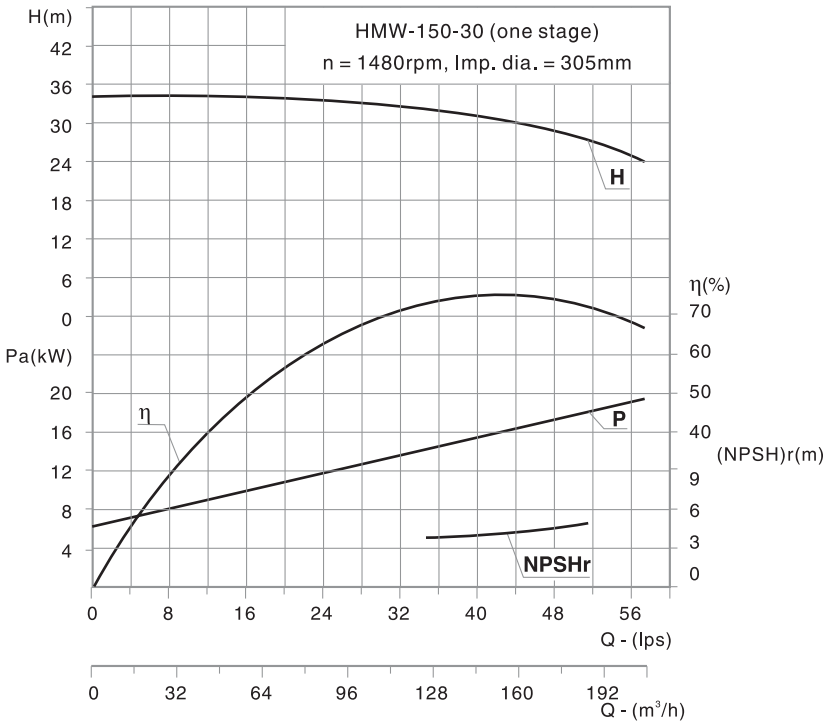

Performance Table

Stage	Q Flow		H Head	n Speed	η Eff.	N Shaft Power	Motor		(NPSH)r	D Impeller Diameter
							Power	Frame Size - Pole		
	(m^3/h)	(L/s)	(m)	(rpm)	(%)	(kW)	(kW)		(m)	(mm)
2	119 155 190	33 43 52.8	64 60 54	1480	69.5 75 76	29.8 33.71 36.95	45	225M-4	3.2 3.9 4.8	Ø305
3	119 155 190	33 43 52.8	96 90 81		69.5 75 76	44.7 50.57 55.42	75	280S-4	3.2 3.9 4.8	
4	119 155 190	33 43 52.8	128 120 108		69.5 75 76	59.6 67.42 73.9	90	280M-4	3.2 3.9 4.8	
5	119 155 190	33 43 52.8	160 150 135		69.5 75 76	74.5 84.28 92.37	110	315S-4	3.2 3.9 4.8	
6	119 155 190	33 43 52.8	192 180 162		69.5 75 76	89.4 101.1 110.8	132	315M-4	3.2 3.9 4.8	
7	119 155 190	33 43 52.8	224 210 189		69.5 75 76	104.3 118.0 129.3	160	315L1-4	3.2 3.9 4.8	
8	119 155 190	33 43 52.8	256 240 216		69.5 75 76	119.2 134.8 147.8	200	315L2-4	3.2 3.9 4.8	
9	119 155 190	33 43 52.8	288 270 243		69.5 75 76	134.1 151.7 166.3	200	315L2-4	3.2 3.9 4.8	
10	119 155 190	33 43 52.8	320 300 270		69.5 75 76	149 168.6 184.7	220	315M1-4	3.2 3.9 4.8	

* The 3rd digit of model name 'W' indicates water application. This digit can be changed suitable for other application (Refer the model identification code).

In view of continuous developments, the information / descriptions / specifications / illustrations are subject to change without notice.

Performance Curve

HMW-25-80 (High Pressure)

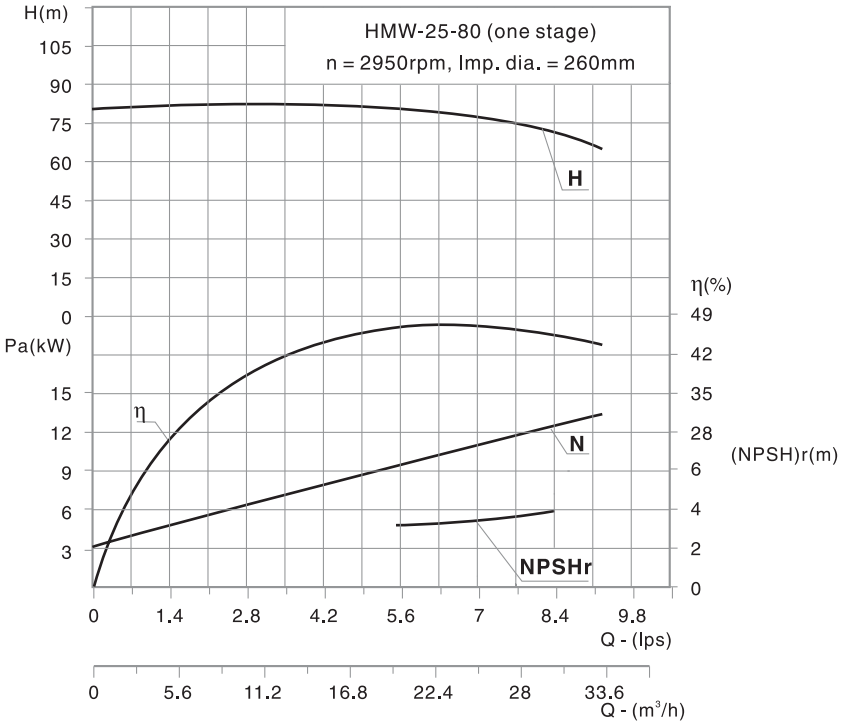

Performance Table

Stage	Q Flow		H Head	n Speed	η Eff.	N Shaft Power	Motor		(NPSH)r	D Impeller Diameter
							Power	Frame Size - Pole		
	(m^3/h)	(L/s)	(m)	(rpm)	(%)	(kW)	(kW)		(m)	(mm)
6	17.4 25 29.1	4.83 6.94 8.08	508 476 454	2950	41.4 48 51.8	57.9 67.5 69.5	90	280M-2	3.1 3.3 3.8	Ø260
7	17.4 25 29.1	4.83 6.94 8.08	590 556 530		41.4 48 51.8	67.5 78.9 81.1	90	280M-2	3.1 3.3 3.8	
8	17.4 25 29.1	4.83 6.94 8.08	675 635 505		41.4 48 51.8	77.3 90.1 92.6	110	315S-2	3.1 3.3 3.8	
9	17.4 25 29.1	4.83 6.94 8.08	760 715 681		41.4 48 51.8	87 101.4 104.2	132	315M-2	3.1 3.3 3.8	
10	17.4 25 29.1	4.83 6.94 8.08	840 795 757		41.4 48 51.8	96.6 112.8 115.8	132	315M-2	3.1 3.3 3.8	
11	17.4 25 29.1	4.83 6.94 8.08	928 875 833		41.4 48 51.8	106.2 124.1 127.5	160	315L1-2	3.1 3.3 3.8	
12	17.4 25 29.1	4.83 6.94 8.08	1013 945 908		41.4 48 51.4	115.9 135.2 138.9	160	315L1-2	3.1 3.3 3.8	

* The 3rd digit of model name 'W' indicates water application. This digit can be changed suitable for other application (Refer the model identification code).

In view of continuous developments, the information / descriptions / specifications / illustrations are subject to change without notice.

Performance Curve

HMW-45-80 (High Pressure)

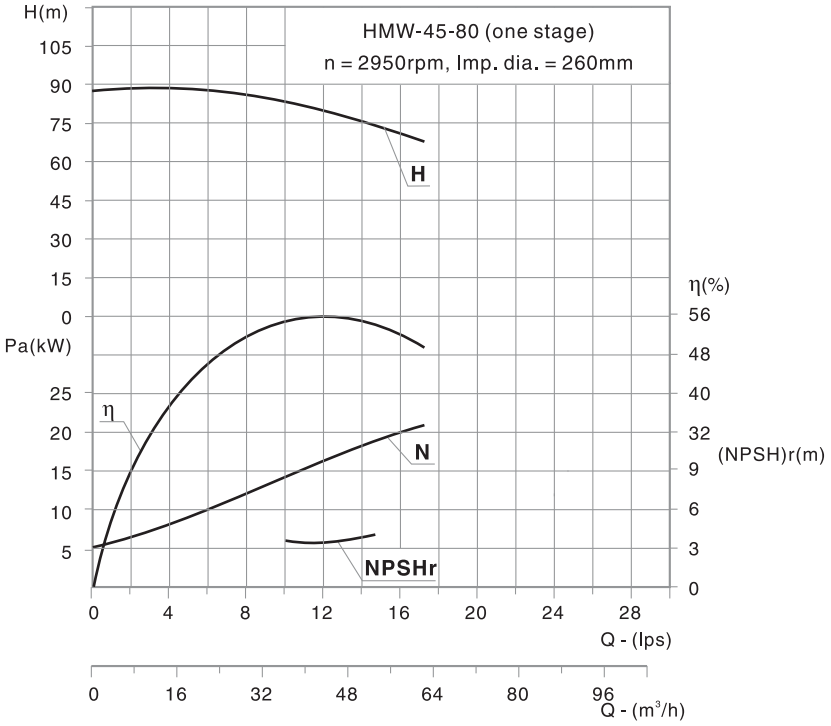

Performance Table

Stage	Q Flow		H Head	n Speed	η Eff.	N Shaft Power	Motor		(NPSH)r	D Impeller Diameter
							Power	Frame Size - Pole		
	(m^3/h)	(L/s)	(m)	(rpm)	(%)	(kW)	(kW)		(m)	(mm)
6	36	10	502	2950	50	98.4	160	315L1-2	3.9	Ø260
	45	12.5	480		55	107			4.0	
	62	17.2	409		56	123.3			5.5	
7	36	10	585.6		50	114.8	160	315L1-2	3.9	
	45	12.5	560		55	124.8			4.0	
	62	17.2	447.2		56	143.9			5.5	
8	36	10	669.2		50	131.2	200	315L2-2	3.9	
	45	12.5	640		55	142.6			4.0	
	62	17.2	545.2		56	164.4			5.5	
9	36	10	752.8		50	147.6	220	3551-2/6kV	3.9	
	45	12.5	720		55	160.4			4.0	
	62	17.2	613.6		56	186			5.5	
10	36	10	836.4		50	164	220	3551-2/6kV	3.9	
	45	12.5	800		55	178.3			4.0	
	62	17.2	681.8		56	205.3			5.5	
11	36	10	920		50	180.4	250	3552-2/6kV	3.9	
	45	12.5	880		55	196.4			4.0	
	62	17.2	750		56	225.9			5.5	
12	36	10	1003.6		50	196.8	280	3553-2/6kV	3.9	
	45	12.5	960		55	213.9			4.0	
	62	17.2	818.2		56	246.7			5.5	

* The 3rd digit of model name 'W' indicates water application. This digit can be changed suitable for other application (Refer the model identification code).

In view of continuous developments, the information / descriptions / specifications / illustrations are subject to change without notice.

Performance Curve

HMW-85-80 (High Pressure)

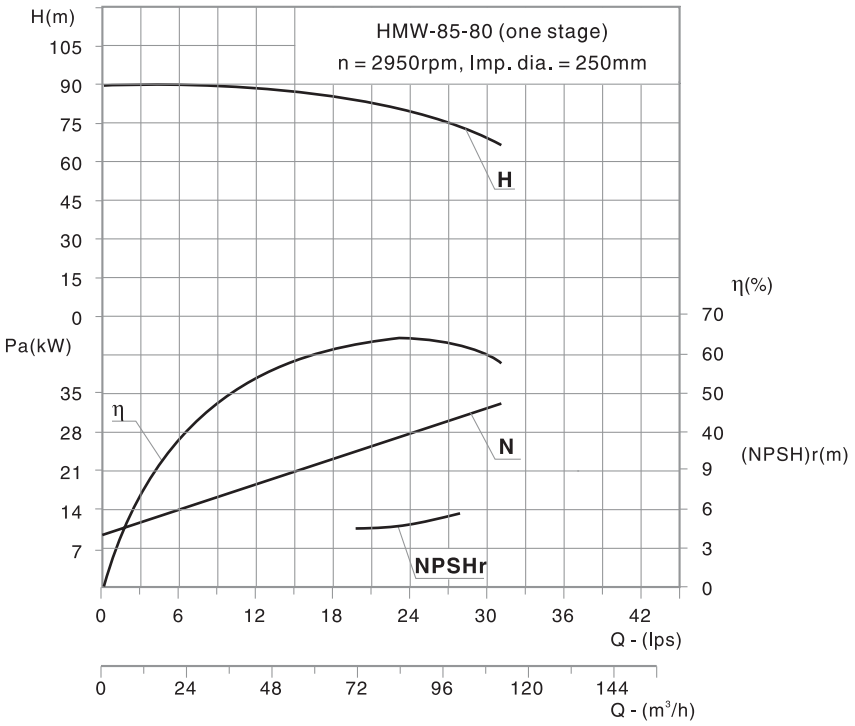

Performance Table

Stage	Q Flow		H Head	n Speed	η Eff.	N Shaft Power	Motor		(NPSH)r	D Impeller Diameter
							Power	Frame Size - Pole		
	(m^3/h)	(L/s)	(m)	(rpm)	(%)	(kW)	(kW)		(m)	(mm)
7	54 85 108	15 23.6 30	616 560 490	2950	53 65 66	170.9 199.3 218.4	250	3552-2/6kV	3.5 4.5 4.3	Ø250
8	54 85 108	15 23.6 30	704 640 560		53 65 66	195.3 227.8 249.6	280	3553-2/6kV	3.5 4.5 4.3	
9	54 85 108	15 23.6 30	792 720 630		53 65 66	219.8 256.3 280.7	355	3555-2/6kV	3.5 4.5 4.3	
10	54 85 108	15 23.6 30	880 800 700		53 65 66	244.2 284.8 311.9	355	3555-2/6kV	3.5 4.5 4.3	
11	54 85 108	15 23.6 30	968 880 770		53 65 66	268.6 313.2 343	400	3556-2/6kV	3.5 4.5 4.3	
12	54 85 108	15 23.6 30	1056 960 840		53 65 66	293 341.7 374.3	450	4001-2/6kV	3.5 4.5 4.3	

* The 3rd digit of model name 'W' indicates water application. This digit can be changed suitable for other application (Refer the model identification code).
In view of continuous developments, the information / descriptions / specifications / illustrations are subject to change without notice.

Performance Curve

HMW-150-100 (High Pressure)

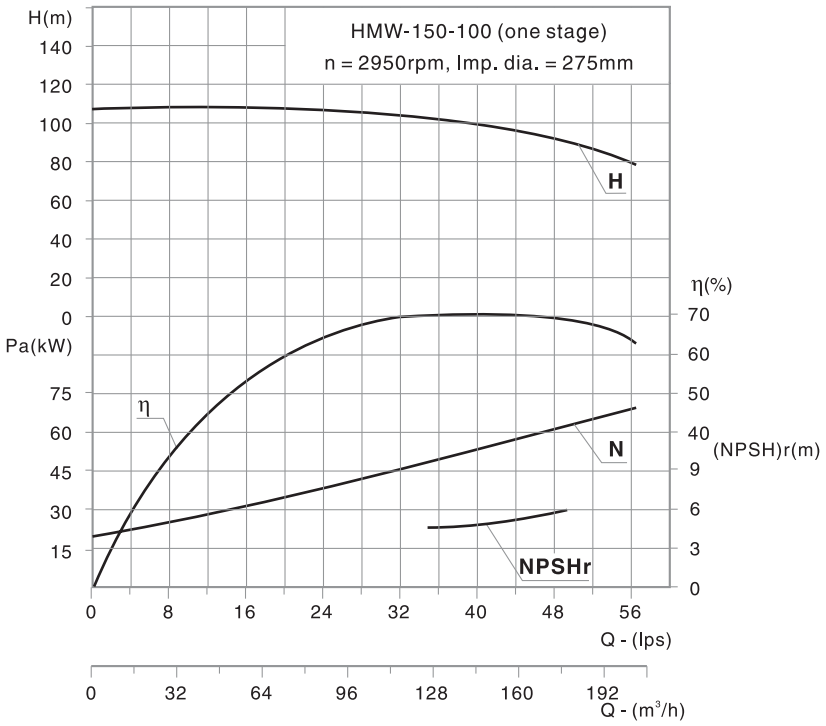

Performance Table

Stage	Q Flow		H Head	n Speed	η Eff.	N Shaft Power	Motor		(NPSH)r	D Impeller Diameter
							Power	Frame Size - Pole		
	(m^3/h)	(L/s)	(m)	(rpm)	(%)	(kW)	(kW)		(m)	(mm)
6	120 150 180	33.3 41.6 50	630 591 540	2950	67 70 72	307 345 368	440	JK134-2/6kV	3.4 4.8 5.5	Ø275
7	120 150 180	33.3 41.6 50	735 689.5 630		67 70 72	358.5 402.5 429	500	JK500-2/6kV	3.4 4.8 5.5	
8	120 150 180	33.3 41.6 50	840 788 720		67 70 72	410 460 490	630	JK630-2/6kV	3.4 4.8 5.5	
9	120 150 180	33.3 41.6 50	945 886.5 810		67 70 72	461 517.5 551.5	630	JK630-2/6kV	3.4 4.8 5.5	
10	120 150 180	33.3 41.6 50	1050 985 900		67 70 72	512 575 613	800	JK800-2/6kV	3.4 4.8 3.5	

* The 3rd digit of model name 'W' indicates water application. This digit can be changed suitable for other application (Refer the model identification code).

In view of continuous developments, the information / descriptions / specifications / illustrations are subject to change without notice.

Overall Dimension Drawing (Pump + Motor)

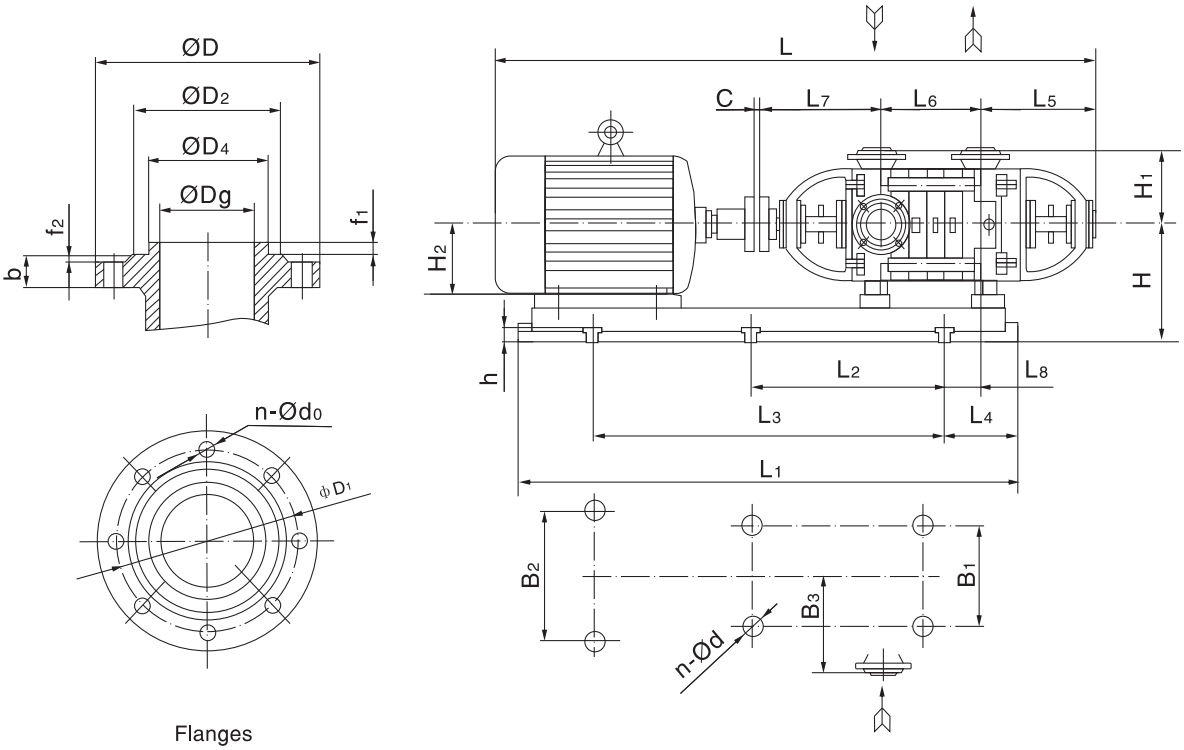

Flanges

Overall Dimension Drawing (Pump)

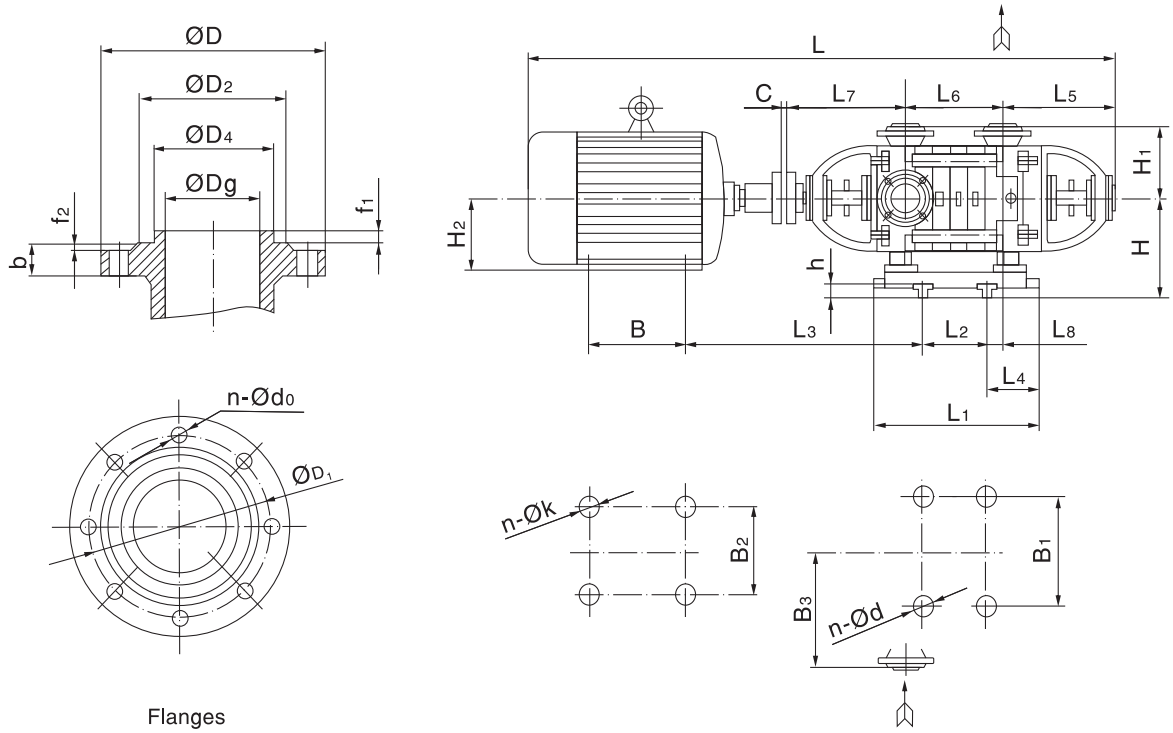

Flanges

In view of continuous developments, the information / descriptions / specifications / illustrations are subject to change without notice.

Overall Dimensions

HMW-6-25 (Pump + Motor)

Stage	L	L_1	L_2	L_3	L_4	L_5	L_6	L_7	L_8	C	B_1	B_2	B_3	H	H_1	H_2	h	n-Ød
2	1047	855	—	575	145	240	130	275	85	2	350	350	170	275	170	100	30	4-Ø24
3	1192	965		645	190		180		55		370	370				132		
4	1242						230		105									
5	1292						280		155									
6	1478	1215		820	230		330		105		360	430		260		160		
7	1528						380		155									
8	1578	1430		920	300		430		170		410	480		270			35	
9	1628						480		170									
10	1723	1500		990	350		530		170		365	460		280			40	
11	1773						580		220									
12	1823						630		270									

HMW-6-50 (Pump + Motor)

Stage	L	L_1	L_2	L_3	L_4	L_5	L_6	L_7	L_8	C	B_1	B_2	B_3	H	H_1	H_2	h	n-Ød
2	1407	1170	—	840	190	284	160	343	5	2	480	480	215	260	215	160	35	4-Ø24
3	1467						220		70									
4	1572	1230		845	210		280		140		460	460						
5	1654	1310		880	240		340		190		465	465				180		
6	1822	1650		990	415		400		155		445	510		280		200		
7	1882						460		215									
8	1942						520		275									
9	2002						580		335									
10	2097	1750		1305	220		640		155		470	545		305		225		
11	2157						700		215									
12	2335	2000	600	1200	400		760		329		460	595		330		250		6-Ø30

HMW-12-25 (Pump + Motor)

Stage	L	L_1	L_2	L_3	L_4	L_5	L_6	L_7	L_8	C	B_1	B_2	B_3	H	H_1	H_2	h	n-Ød
2	1067	965	—	645	190	240	130	275	-5	2	370	370	170	250	170	132	30	4-Ø24
3	1192						180		55									
4	1378	1120		745	205		230		75		360	440		255		160	35	
5	1428						280		125									
6	1478	1215		820	230		330		105		360	430					30	
7	1528						380		155									
8	1623	1430		920	300		430		170		410	480		270			35	
9	1673						480		170									
10	1743	1490		975	355		530		185		365	470		280		180	30	
11	1793						580		235									
12	1952	1640		965	445		630		365		350	500		350		200	45	

HMW-12-50 (Pump + Motor)

Stage	L	L_1	L_2	L_3	L_4	L_5	L_6	L_7	L_8	C	B_1	B_2	B_3	H	H_1	H_2	h	n-Ød
2	1412	1230	—	845	210	284	160	345	15	5	460	460	215	260	215	160	30	4-Ø24
3	1517						220		75									
4	1597	1310		880	240		280		130		465	465				180		
5	1762	1650		990	415		340		120		445	510		280			35	
6	1822						400		185							200		
7	1882						460		245									
8	1982	1750		1305	220		520		-5		470	545		315		225		
9	2042						580		55									
10	2204	1870	500	1200	420		640		288		460	595		330		250		6-Ø30
11	2264						700		348									
12	2407	2000	600	1300	400		760		329			645		360		280		

Note: those with "-" in dimensions of "L8" means being on the other side.

In view of continuous developments, the information / descriptions / specifications / illustrations are subject to change without notice.

Overall Dimensions

HMW-25-30 (Pump + Motor)

Stage	L	L_1	L_2	L_3	L_4	L_5	L_6	L_7	L_8	C	B_1	B_2	B_3	H	H_1	H_2	h	n-Ød
2	1416	1170	—	840	190	285	165	345	5	5	480	480	210	260	210	160	35	4-Ø24
3	1481						230		70									
4	1591	1230		845	210		295		140		460	460						
5	1680	1310		880	240		360		190		465	465				180	30	
6	1850	1440		930	310		425		210			510		280		200	35	
7	1915	1650		990	415		490		245		445	510						
8	1980						555		310									
9	2045						620		375									
10	2150	1750		1305	220		685		155		470	545		315		225		

HMW-25-50 (Pump + Motor)

Stage	L	L_1	L_2	L_3	L_4	L_5	L_6	L_7	L_8	C	B_1	B_2	B_3	H	H_1	H_2	h	n-Ød
3	1637	1240	—	665	280	355	250	345	175	2	500	500	300	360	270	180	40	4-Ø24
4	1802	1430		900	250		310		100		520	520		320		200	45	
5	1862						370		160									
6	1962	1560	530	1060	235		430		165		560	560		365		225	40	6-Ø24
7	2137	1740	555	1120	360		490		125		530	600		350		250		
8	2267	2040	725	1470	380		550		120		500	720		430		280		
9	2327						610		110									
10	2387						670		170									
11	2497						730		230									
12	2753	2200	745	1490	370		790		270		510	730		440		315	50	

HMW-46-30 (Pump + Motor)

Stage	L	L_1	L_2	L_3	L_4	L_5	L_6	L_7	L_8	C	B_1	B_2	B_3	H	H_1	H_2	h	n-Ød
2	1416	1170	—	840	190	280	165	345	5	5	485	485	210	260	210	160	40	4-Ø24
3	1546				140		230		130							180		
4	1720	1440		930	310		295		140		465	510		280		200	30	
5	1785						360		190									
6	1855						425		210									
7	1955	1560		1110	230		490		50		460	540		315		225	35	
8	2135	1750		1120	390		555		260		480	610		330		250	30	
9	2200						620		325									
10	2335	1910		1240	410		685		340		470	660		360		280		

HMW-46-50 (Pump + Motor)

Stage	L	L_1	L_2	L_3	L_4	L_5	L_6	L_7	L_8	C	B_1	B_2	B_3	H	H_1	H_2	h	n-Ød
2	1682	1430	—	900	250	355	190	345	-15	2	520	520	300	320	270	200	45	4-Ø24
3	1742						250		45									
4	1842	1560	530	1060	235		310		0		560	560		365		225	40	6-Ø24
5	2017	1740	555	1115	360		370		100		530	600		350		250		
6	2147	2040	725	1470	380		430		-30		500	720		430		280		
7	2257						490		60									
8	2317						550		120									
9	2573	2200	745	1490	370		610		110		510	730		440		315	50	
10	2703						670		170									
11	2763						730		230									
12	2823						790		270									

Note: those with "-" in dimensions of "L8" means being on the other side.

In view of continuous developments, the information / descriptions / specifications / illustrations are subject to change without notice.

Overall Dimensions

HMW-85-45 (Pump + Motor)

Stage	L	L_1	L_2	L_3	L_4	L_5	L_6	L_7	L_8	C	B_1	B_2	B_3	H	H_1	H_2	h	n-Ød
2	1641	1250	—	840	200	304	203	340	110	4	520	520	250	325	250	200	30	4-Ø24
3	1870	1520		1040	230		277		130		530	635		360		250	40	
4	2014	1690	560	1120	310		351		145		520	670		385		280	35	6-Ø24
5	2137						425		205									

HMW-85-45 (Pump)

Stage	L	L_1	L_2	L_3	L_4	L_5	L_6	L_7	L_8	C	B	B_1	B_2	B_3	H	H_1	H_2	h	n-Ød	4-ØK
4	2014	600	330	707	135	304	351	340	3	4	368	520	460	250	345	250	280	40	4-Ø24	Ø24
5	2137	750	380	694	190		425		40		419	540	535							
6	2408			785			499		53		406						315			Ø28
7	2552			821			573		90		457									
8	2626	900	525	779			647		61			520	510						4-Ø26	
9	2700			816			721		98											

HMW-85-67 (Pump)

Stage	L	L_1	L_2	L_3	L_4	L_5	L_6	L_7	L_8	C	B	B_1	B_2	B_3	H	H_1	H_2	h	n-Ød	4-ØK
3	2465	765	400	880.5	182	479	371	559	-14	4	419	600	457	350	420	350	280	50	4-Ø30	Ø24
4	2743			950.5			459		29.5		406		508				315	60		Ø28
5	2901			994.5			547		73.5		457									
6	2989	945	580	948.5			635		27.5									50		
7	3007			992.5			723		71.5											
8	3395	1125	760	946.5			811		25.5		560		610				355	60		
9	3483			990.5			899		69.5											

HMW-120-50 (Pump + Motor)

Stage	L	L_1	L_2	L_3	L_4	L_5	L_6	L_7	L_8	C	B_1	B_2	B_3	H	H_1	H_2	h	n-Ød
2	1912	1430	—	900	265	304	260.5	353.5	202	4	595	595	300	355	1316	250	50	4-Ø28
3	2119	1635		1000	300		347.5		237		545	650		385		280		
4	2466	1895	500	1200			434.5				550	735		435		315		6-Ø40
5	2553						521.5											
6	2640	2210	550	1350	400		608.5		337			750						
7	2727						695.5											
8	2814						782.5											
9	2901	2370	800	1600			869.5					860		485		355		

HMW-155-30 (Pump + Motor)

Stage	L	L_1	L_2	L_3	L_4	L_5	L_6	L_7	L_8	C	B_1	B_2	B_3	H	H_1	H_2	h	n-Ød
2	1916	1980	680	1350	315	365	310	388	-25	4	660	660	350	400	350	225	35	6-Ø26
3	2186						425		90							280		
4	2351						540		210									
5	2710	2400	750	1500	530		655	418	230		580	720	350	445	350	315		
6	2897						770		345									
7	3014						885		460									

Note: those with "-" in dimensions of "L8" means being on the other side.

In view of continuous developments, the information / descriptions / specifications / illustrations are subject to change without notice.

Overall Dimensions

HMW-155-30 (Pump)

Stage	L	L_1	L_2	L_3	L_4	L_5	L_6	L_7	L_8	C	B	B_1	B_2	B_3	H	H_1	H_2	h	n-Ød	4-ØK
2	1916	740	450	605	140	365	310	388	-70	4	311	600	356	350	400	350	225	50	4-Ø26	Ø24
3	2186			746			425		-12.5		368		457				280			
4	2351			804			540		45		419									
5	2710	1060	805	811			655	418	70		406	580	508				315	40	4-Ø27	Ø28
6	2897			868			770		12.5		457									
7	3014			958			885		-45											
8	3130	1500	1210	821	145		1000		-105		508	595							4-Ø25	
9	3245			878			1115		-47.5	5										
10	3590			903			1230		10		560		610				355			

HMW-155-67 (Pump)

Stage	L	L_1	L_2	L_3	L_4	L_5	L_6	L_7	L_8	C	B	B_1	B_2	B_3	H	H_1	H_2	h	n-Ød	4-ØK
3	2725	765	400	906.5	182	479	371	559	-14	4	457	600	508	355	420	350	315	50	4-Ø30	Ø28
4	2743			950.5			45		29.5											
5	3131			995.5			547		73.5		560		610				355			
6	3219	945	580	987.5			635		27.5		630									
7	3308			1031			723		71.5	5										
8	3295	1125	760	985.5			811		25.5											
9	4634			1095			899		69.5		1000		710				400			Ø32

HMW-280-43 (Pump)

Stage	L	L_1	L_2	L_3	L_4	L_5	L_6	L_7	L_8	C	B	B_1	B_2	B_3	H	H_1	H_2	h	h_1	n-Ød	4-ØK
2	2423	735	435	773	150	384	373	388	-52	5	406	700	508	450	480	400	315	50	35	4-Ø30	Ø28
3	2623			838			503		13		457										
4	2753			903			633		78		508								38		
5	3113	1125	800	821.5	162.5		763		-39.5		560		610				355				
6	3243			886.5			893		25.5		630										
7	3815	1385	1060	1072.5			1023	420	90.5	6	1000		710				400				Ø35
8	3945			1007.5			1153		25.5												
9	4075			1072.5			1283		90.5												

HMW-280-65 (Pump)

Stage	L	L_1	L_2	L_3	L_4	L_5	L_6	L_7	L_8	C	B	B_1	B_2	B_3	H	H_1	H_2	h	h_1	n-Ød	4-ØK
3	3214	690	310	1243	190	536	475	625	80	6	900	790	630	500	530	500	355	50	35	4-Ø40	Ø28
4	3754	820	440	1263			605				1000		710				400		38		Ø35
5	3884	950	570				735														
6	4014	1080	700	1284			865			7	1120		800				450				
7	4345	1210	830				995														
8	4475	1340	960				1125														
9	4605	1470	1090				1255														
10	5105	1600	1220	1444			1385														

Note: those with "-" in dimensions of "L8" means being on the other side.

In view of continuous developments, the information / descriptions / specifications / illustrations are subject to change without notice.

Overall Dimensions

HMW-360-40 (Pump)

Stage	L	L_1	L_2	L_3	L_4	L_5	L_6	L_7	L_8	C	B	B_1	B_2	B_3	H	H_1	H_2	h	h_1	n-Ød	4-ØK
2	2539	505	200	927	150	384	390	417	73	6	457	700	508	450	450	400	315	50	38	4-Ø40	Ø28
3	2909	645	340	965			530				560		610				355				
4	3049	785	480				670														
5	3189	925	620				810				630								40		
6	3731	1065	760	1087			950				1000		710				400				Ø35
7	3871	1205	900				1090														
8	4011	1345	1040				1230														
9	4151	1485	1180				1370														
10	4291	1626	1320	1107			1510				1120		800				450				

HMW-450-60 (Pump)

Stage	L	L_1	L_2	L_3	L_4	L_5	L_6	L_7	L_8	C	B	B_1	B_2	B_3	H	H_1	H_2	h	h_1	n-Ød	4-ØK
3	3281	725	390	1243	170	537	574	591	11.5	7	1000	850	710	500	560	550	355	45	38	4-Ø42	Ø35
4	3844	860	541		160		727										400				
5	4197	1070	694	1263	190		880				1120		800				450				
6	4350	1230	847				1033														
7	4503	1380	1000				1186														
8	4656	1535	1153				1339														
9	5179	1685	1306	1423			1492				1250		900				500				Ø42
10	5331	1840	1459				1645														

HMW-550-50 (Pump)

Stage	L	L_1	L_2	L_3	L_4	L_5	L_6	L_7	L_8	C	B	B_1	B_2	B_3	H	H_1	H_2	h	h_1	n-Ød	4-ØK
2	3448	725	390	1146.5	170	537	421	591	11.5	7	900	850	630	500	560	550	355	45	40	4-Ø42	Ø28
3	3693	860	541	1166.5	160		574				1000		710				400				Ø35
4	3846	1075	694		190		727														
5	3999	1230	847				880														
6	4352	1380	1000	1186.5			1033				1120		800				450				
7	4505	1535	1153				1186														
8	4658	1685	1306				1339														
9	5181	1840	1459	1346.5			1492				1250		900				500				Ø42

HMW-650-70 (Pump)

Stage	L	L_1	L_2	L_3	L_4	L_5	L_6	L_7	L_8	C	B	B_1	B_2	B_3	H	H_1	H_2	h	h_1	n-Ød	4-ØK
2	3691	697	317	1363	190	465	599	638	111	7	1000	950	710	615	620	540	400	50	40	4-Ø42	Ø35
3	3869	875	495				777														
4	4236	1053	673	1383			955				1120		800				450				
5	4414	1231	851				1133														
6	4795	1409	1029	1543			1311				1250		900				500				
7	4973	1587	1207				1489														
8	5679	1765	1385	1568			1677				1400		1000				560				Ø42

Note: those with "-" in dimensions of "L8" means being on the other side.

In view of continuous developments, the information / descriptions / specifications / illustrations are subject to change without notice.

Overall Dimensions

HMW-740-80 (Pump)

Stage	L	L_1	L_2	L_3	L_4	L_5	L_6	L_7	L_8	C	B	B_1	B_2	B_3	H	H_1	H_2	h	h_1	n-Ød	4-ØK
2	3680	697	317	1363	190	465	599	638	111	7	1000	950	710	615	620	540	400	50	40	4-Ø42	Ø35
3	4069	875	495	1383			777				1120		800				450				
4	4615	1053	673	1543			955				1250		900				500				Ø42
5	4793	1231	851				1133														
6	5321	1409	1029	1568			1311				1400		1000				560				

HMW-80-12 (Pump + Motor)

Stage	L	L_1	L_2	L_3	L_4	L_5	L_6	L_7	L_8	C	B_1	B_2	B_3	H	H_1	H_2	h	n-Ød
2	1153	1120	—	785	180	255	195	290	-40	3	410	410	170	260	210	112	35	4-Ø24
3	1298						265		20							132		
4	1368						335		80									
5	1574	1400		1060	165		405	293	-15		430	430		280		160	40	
6	1644						475		55									
7	1714	1580		1065	345		545		140					270			45	
8	1784						615		210									
9	1899						685		270									

HMW-80-30 (Pump + Motor)

Stage	L	L_1	L_2	L_3	L_4	L_5	L_6	L_7	L_8	C	B_1	B_2	B_3	H	H_1	H_2	h	n-Ød
3	1449	1140	—	785	200	245	229	300	120	2	440	440	200	280	205	160	30	4-Ø24
4	1530	1200			215		290		140					275		180		
5	1698	1415		1010	195		351		50		430	490		300		200	40	
6	1759						412		110									
7	1860	1520		995	265		473		165		440	540		335		225	45	
8	2036	1820	665	1330	240		534		60		455	600		350		250	40	
9	2097						595		90									
10	2158						656		150									

HMW-100-16 (Pump + Motor)

Stage	L	L_1	L_2	L_3	L_4	L_5	L_6	L_7	L_8	C	B_1	B_2	B_3	H	H_1	H_2	h	n-Ød
2	1260	1010	—	635	190	275	229	266	135	2	500	500	220	250	230	132	40	4-Ø27
3	1470	1260		850	190		306		35		480	480		285		160		4-Ø25
4	1589						383		110									
5	1696	1415		1020	205		460	276	50		450	450		295		180		4-Ø23
6	1773						537		-45					325				
7	1967	1820		1000	410		614	288	225		545	545		300		200		4-Ø26
8	2046						691		275									
9	2123						768		315									

HMW-100-45 (Pump + Motor)

Stage	L	L_1	L_2	L_3	L_4	L_5	L_6	L_7	L_8	C	B_1	B_2	B_3	H	H_1	H_2	h	n-Ød
2	1641	1250	—	840	200	304	203	340	110	4	520	520	250	325	250	200	30	4-Ø24
3	1870	1520		1040	230		277		130		530	635		360		250	40	
4	2014	1690	560	1120	310		351		145		520	670		385		280	35	6-Ø24
5	2137						425		205									

Note: those with "-" in dimensions of "L8" means being on the other side.

In view of continuous developments, the information / descriptions / specifications / illustrations are subject to change without notice.

Overall Dimensions

HMW-100-45 (Pump)

Stage	L	L_1	L_2	L_3	L_4	L_5	L_6	L_7	L_8	C	B	B_1	B_2	B_3	H	H_1	H_2	h	n-Ød	4-ØK
4	2014	600	330	707	135	304	351	340	3	4	368	520	460	250	345	250	280	40	4-Ø24	Ø24
5	2137	750	380	694	190		425		40		419	540	535							
6	2408			785			499		53		406						315			Ø28
7	2552			821			573		90		457									
8	2626	900	525	779			647		61			520	510						4-Ø26	
9	2700			816			721		98											

HMW-125-25 (Pump + Motor)

Stage	L	L_1	L_2	L_3	L_4	L_5	L_6	L_7	L_8	C	B_1	B_2	B_3	H	H_1	H_2	h	n-Ød
2	1477	1180	—	740	210	245	262	287	125	2	520	520	280	335	300	180	40	4-Ø24
3	1676	1480		1010	250		352		45		555	555		315		200		
4	1766						442		135									
5	1906	1560	530	1060	235		532	297	115		560	560		365		225		6-Ø24
6	2111	1740	555	1115	360		622		275		530	600		350		250		
7	2271	2210	700	1410	380		712		160		610	705		395		280	60	
8	2361						802		215									
9	2501						892		295	4								

HMW-150-30 (Pump + Motor)

Stage	L	L_1	L_2	L_3	L_4	L_5	L_6	L_7	L_8	C	B_1	B_2	B_3	H	H_1	H_2	h	n-Ød
2	1916	1980	680	1350	315	365	310	388	-25	4	660	660	350	400	350	225	35	6-Ø26
3	2186						425		90							280		
4	2351						540		210									
5	2710	2400	750	1500	530		655	418	230		580	720	350	445	350	315		
6	2897						770		345									
7	3014						885		460									

HMW-150-30 (Pump)

Stage	L	L_1	L_2	L_3	L_4	L_5	L_6	L_7	L_8	C	B	B_1	B_2	B_3	H	H_1	H_2	h	n-Ød	4-ØK
2	1916	740	450	605	140	365	310	388	-70	4	311	600	457	350	400	350	225	50	4-Ø26	Ø24
3	2186			746			425		-12.5		368						280			
4	2351			804			540		45		419									
5	2710	1060	805	811			655	418	70		406	580	508				315	40	4-Ø27	Ø28
6	2897			868			770		12.5		457									
7	3014			958			885		-45											
8	3130	1500	1210	821	145		1000		-105	5	508	595							4-Ø25	
9	3245			878			1115		-47.5											
10	3590			903			1230		10		560		610				355			

Note: those with "-" in dimensions of "L8" means being on the other side.

In view of continuous developments, the information / descriptions / specifications / illustrations are subject to change without notice.

Overall Dimension Drawing (High Pressure)

HMB-25-80, 45-80, 85-80

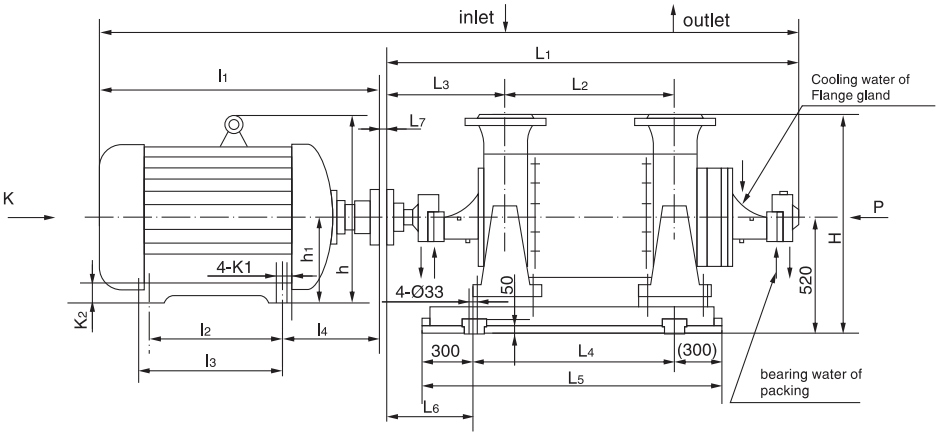

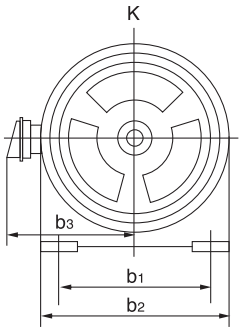

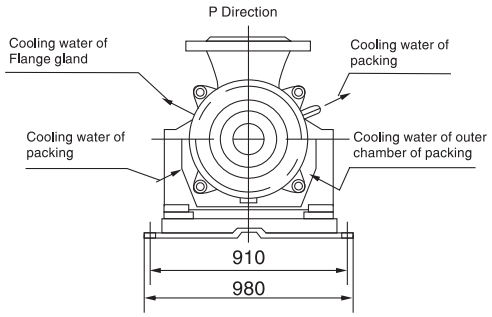

HMB-150-100

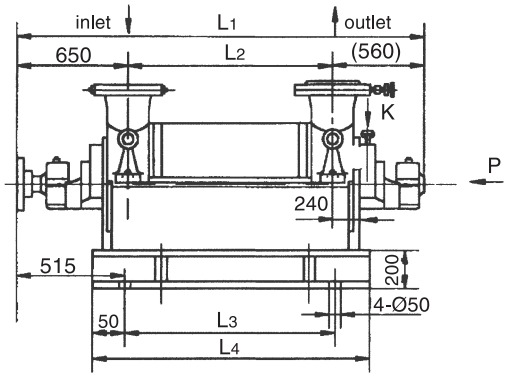

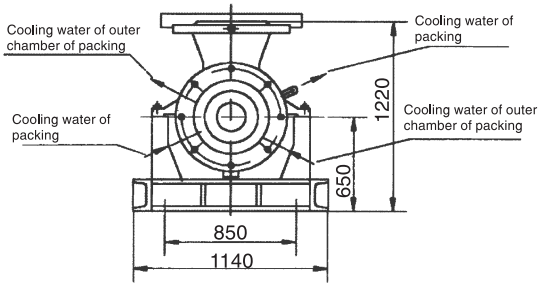

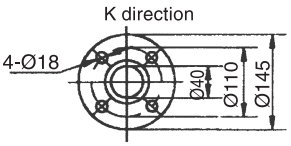

Type Pump	L_1	L_2	L_3	L_4
HMB-150-100x6	2005	795	1085	1185
HMB-150-100x7	2110	900	1190	1290
HMB-150-100x8	2215	1005	1295	1395
HMB-150-100x9	2320	1110	1400	1500
HMB-150-100x10	2425	1215	1505	1605

In view of continuous developments, the information / descriptions / specifications / illustrations are subject to change without notice.

Overall Dimensions (High Pressure)

HMB-25-80, 45-80, 85-80

Pump type	Pump Part									Motor Part										
	L	L_1	L_2	L_3	L_4	L_5	L_6	L_7	H	l_1	l_2	l_3	l_4	b_1	b_2	b_3	h	h_1	k_1	k_2
HMB-25-80x6	2480	1426	536	439	432	1032	532	4	870	1050	419	560	330	457	550	580	640	280	24	30
HMB-25-80x7	2559	1505	615																	
HMB-25-80x8	2828	1584	694		590	1190				1240	406	550	356	508	744	645	865	315	28	40
HMB-25-80x9	2977	1663	773							1310	457	600								
HMB-25-80x10	3056	1742	852		827	1427														
HMB-25-80x11	3135	1821	931								508	650								
HMB-25-80x12	3214	1900	1010																	
HMB-45-80x6	2740	1426	536	439	432	1032														
HMB-45-80x7	2819	1505	615																	
HMB-45-80x8	2898	1584	694		590	1190														
HMB-45-80x9	3537	1663	773							1870	900	1420	485	630	770	800	1170	355		
HMB-45-80x10	3616	1742	852		827	1427														
HMB-45-80x11	3695	1821	931																	
HMB-45-80x12	3774	1900	1010																	
HMB-85-80x7	3575	1700	630	432	590	1032	643	5	880	1870	900	1510								
HMB-85-80x8	3655	1780	710	543		1190														
HMB-85-80x9	3735	1860	790																	
HMB-85-80x10	3815	1940	870		827	1427														
HMB-85-80x11	3895	2020	950																	
HMB-85-80x12	3975	2100	1030							2090	1000	1510	545	710	810	850	1330	400	35	

In view of continuous developments, the information / descriptions / specifications / illustrations are subject to change without notice.

Inlet and Outlet Flanges Dimensions

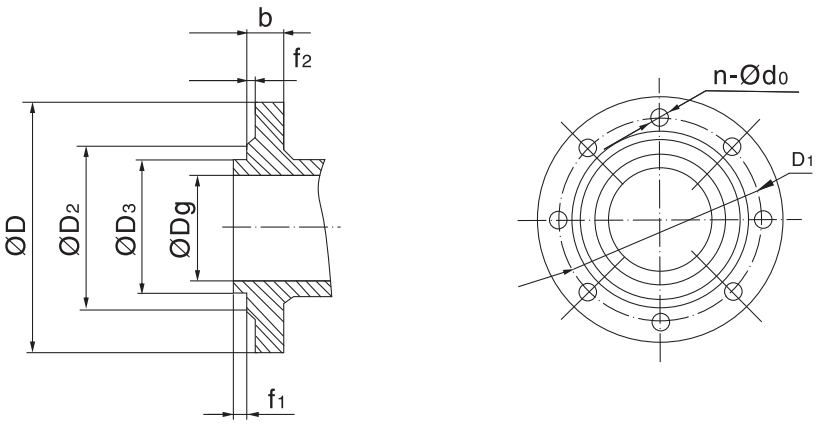

Pump type		Inlet flange								Oulet flange							
		Dg	D	D1	D2	D3	b	f1/f2	n-Ød	Dg	D	D1	D2	D3	b	f1/f2	n-Ød
HMW HMA HML HMB	6-25	40	130	100	80	—	16	-/3	4-13.5	40	150	110	88	75	20	4/3	4-17.5
HMW HMA HML HMB	6-50	50	160	110	90	—	30	-/3	4-13.5	50	175	135	105	87	28	4/3	4-23
HMW HMA HML HMB	12-25	50	140	110	90	—	16	-/3	4-13.5	40	150	110	88	75	20	4/3	4-17.5
HMW HMA HML HMB	12-50	50	160	110	90	—	30	-/3	4-13.5	50	175	135	105	87	28	4/3	4-23
HMW HMA HML HMB	25-30	65	160	130	110	—	16	-/3	4-13.5	65	185	145	122	109	24	4/3	8-17.5
HMW HMA HML HMB	25-50	80	190	150	128	—	18	-/3	4-17.5	80	215	170	133	120	30	4/3	8-22
		80	215	170	133	120	30	4/3	8-22								
HMW HMA HML HMB	46-30	80	190	150	128	—	18	-/3	4-17.5	65	185	145	122	109	24	4/3	8-17.5
HMW HMA HML HMB	46-50	80	190	150	128	—	18	-/3	4-17.5	80	215	170	133	120	30	4/3	8-22
		80	215	170	133	120	30	4/3	8-22								
HMW HMA HML HMB	85-45	100	210	170	148	—	18	-/3	4-17.5	100	235	190	158	149	28	4.5/3	8-22

In view of continuous developments, the information / descriptions / specifications / illustrations are subject to change without notice.

Inlet and Outlet Flanges Dimensions

Pump type		Inlet flange								Oulet flange							
		Dg	D	D_1	D_2	D_3	b	f_1/f_2	n-Ød	Dg	D	D_1	D_2	D_3	b	f_1/f_2	n-Ød
HMW HMA HML	85-67	150	265	225	202	—	20	-/3	8-17.5	150	345	280	212	203	33	4.5/3	8-33
HMB		150	345	280	212	203	33	4.5/3	8-33								
HMW HMA HML HMB	120-50	125	240	200	178	—	20	-/3	8-17.5	125	270	220	184	175	30	4.5/3	8-26
HMW HMA HML HMB	155-30	150	285	240	212	—	26	-/3	8-22	150	300	250	212	203	34	4.5/3	8-26
HMW HMA HML	155-67	150	265	225	205	—	20	-/3	8-17.5	150	345	280	212	203	33	4.5/3	8-33
HMB		150	345	280	212	203	33	4.5/3	8-33								
HMW HMA HML	280-43	200	340	295	268	—	28	-/3	8-22	200	375	320	285	259	38	4.5/3	12-30
HMW HMA HML	280-65	200	340	295	268	—	30	-/3	12-22	200	415	345	285	259	44	4.5/3	12-36
HMW HMA HML	360-40	200	340	295	268	—	28	-/3	8-22	200	375	320	285	259	38	4.5/3	12-30
HMW HMA HML	450-60	250	405	355	320	—	32	-/3	12-26	250	470	400	345	312	48	4.5/3	12-36
HMW HMA HML	550-50	250	405	355	320	—	32	-/3	12-26	250	470	400	345	312	48	4.5/3	12-36
HMW HMA HML	650-70	300	530	460	412	—	32	-/3	16-41	300	585	500	442	—	48	4.5/3	16-48
HMW HMA HML	740-80	300	530	460	412	—	32	-/3	16-41	300	585	500	442	—	48	4.5/3	16-48
HMW HMA HML	80-12	80	190	150	128	—	18	-/3	4-17.5	80	200	160	133	—	26	-/3	8-17.5
HMW HMA HML	80-30	80	195	160	135	—	22	-/3	4-17.5	80	200	160	133	—	26	-/3	8-17.5
HMW HMA HML	100-16	100	210	170	148	—	18	-/3	4-17.5	100	220	180	158	—	24	-/3	8-17.5
HMW HMA HML	100-45	100	210	170	148	—	18	-/3	4-17.5	100	235	190	158	149	28	4.5/3	8-22
HMW HMA HML	125-25	125	240	200	178	—	20	-/3	8-17.5	125	270	220	184	175	30	4.5/3	8-26
HMW HMA HML	150-30	150	285	240	212	—	26	-/3	8-22	150	300	250	212	203	34	4.5/3	8-26
HMB-25-80		80	195	160	135	—	25	-/3	8-18	65	220	170	138	109	28	4/3	8-25
HMB-45-80		80	195	160	135	—	25	-/3	8-18	65	265	170	138	109	28	4.5/3	8-25
HMB-85-80		100	215	180	155	—	25	-/3	8-18	100	350	210	172	149	34	4.5/3	8-30
HMB-150-100		200	360	310	278	—	34	-/3	12-23	150	350	290	250	203	46	4.5/3	12-34

In view of continuous developments, the information / descriptions / specifications / illustrations are subject to change without notice.

Notes :

Notes :

Notes :

WINNING WAYS

When you have a good thing going it is quite in the fitting of things that recognitions come our way. Several prestigious awards, which decorate our shelf, say it all. These rewards not only acknowledge our position as a leader in the water pump industry but also serve as reminders about what the customer expects from a winner. And we, as ever, have our ears perfectly tuned to customer expectations.

C.R.I. PUMPS (PVT) LIMITED

(International Division)
7/46-1, Keeranatham Road, Saravanampatty, Coimbatore - 641 035. **India.**
Phone : +91-422-3911610, 3911612. Fax : +91-422-3911600 e-mail : cri@criexports.com website: www.crigroups.com

C.R.I. PUMPS (FZE)

P.O. Box 7988, A4-12 SAIF-Zone, **Sharjah,** U.A.E.
Tel : +971-6-5573041 (3 Lines), Fax : +971-6-5573042
e-mail : cripumps@eim.ae website : www.cripumps.com

C.R.I. PUMPS S.A. (PTY) LIMITED

P.O. Box 6292, Halfway House, Midrand - 1685,
Johannesburg, **South Africa.**
Tel : +27-11-8058631 / 32 Fax : +27-11-8058630
e-mail : cri@cripumps.co.za website : www.cripumps.co.za
Branch : Capetown : + 27-21-9499122

C.R.I. POMPA SANAYİ VE TİCARET LİMİTED ŞİRKETİ

10032 Sk. No:12 A.O.S.B. 35620 Çiğli-İzmir-**Türkiye.**
Tel : +90-232-328 22 99 Fax : +90-232-328 23 33
e-mail: cri@cripompa.com Website: www.cripompa.com

BOMBAS C.R.I. ESPAÑA S.L. UNIPERSONAL

Via Linara, 8, 82030, Limatola (BN). **Italy.** Tel : +39.0823.586.904
e-mail: cri@bombascri.it Website: www.crigoups.com

C.R.I. PUMPS (Shanghai) Co., Ltd.

Building 53 (No. 17), 588 Yindu Road,
Minhang District, Shanghai, **China.**
Tel : +86-21-54405082, Fax : +86-21-54405083
e-mail : cri@bombascri.com.cn website : www.bombascri.com.cn

SUZHOU C.R.I. PUMPS CO., LTD.

579, Longqia Road, Wujiang District- 215200
Suzhou, **China.** Telephone:- +86-512-634 33668
Fax:- +86-512-634 33667. e-mail:-cri@crisuzhou.com.cn

C.R.I. BOMBAS HIDRÁULICAS LTDA

Av. Rodrigo Fernando Grillo, 457, Jd. Manacas,
CEP - 14.801-534, Araraquara - SP, **Brasil.**
Fone : +55-16-3331 1099, Fax +55-16-3331 5344
e-mail : cri@cribombas.com.br website : www.cribombas.com.br
Filial : Jaboatão dos Guararapes-PE, Brasil.
Fone : (81) 3093-9620, Fax : (81) 3093-9600.

BOMBAS C.R.I. ESPAÑA, S.L.

Poligono Industrail El.Bony Calle 31, No.137, 46470
Catarroja (Valencia) **Spain.**
Tel: +34-96 1842 974 Fax: +34-96 1842 977.
e-mail: cri@bombascri.es Website: www.bombascri.es

https://www.youtube.com /user/cripumpsglobal

https://www.facebook.com /criglobal

EC-MC-03/17-E3